Frame Documentation
A325 Connection Bolt Details

Page 05-12-10
Date Sep '14 Rev. 03

CONNECTION CODES
(FOR TOP AND BOTTOM BOLT PATTERN)

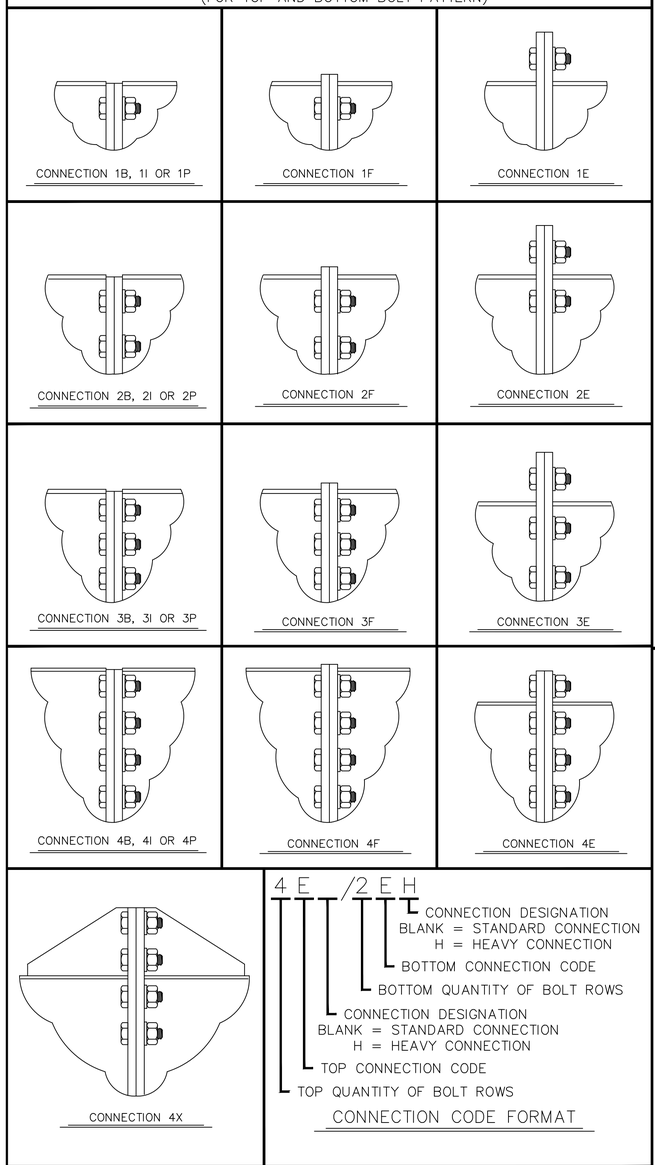

4 E /2 E H
- CONNECTION DESIGNATION
- BLANK = STANDARD CONNECTION
- H = HEAVY CONNECTION
- BOTTOM CONNECTION CODE
- BOTTOM QUANTITY OF BOLT ROWS
- CONNECTION DESIGNATION
- BLANK = STANDARD CONNECTION
- H = HEAVY CONNECTION
- TOP CONNECTION CODE
- TOP QUANTITY OF BOLT ROWS

CONNECTION CODE FORMAT

CONNECTION CODE DESCRIPTION

B = THIS DESCRIPTION CODE IS USED TO DEFINE SHEAR CONNECTIONS. BOLTS ARE LOCATED INSIDE THE TOP FLANGE AND CONNECTION PLATE IS RECESSED 1/8" BELOW THE TOP FLANGE. CONNECTION PLATE LENGTH MUST BE A MINIMUM OF HALF THE RAFTER WEB DEPTH AND SHALL NOT EXCEED THE RAFTER TOTAL DEPTH.

E = THIS DESCRIPTION CODE IS USED TO DEFINE MOMENT CONNECTIONS. BOLTS ARE LOCATED WITH ONE SET OUTSIDE THE TOP OR BOTTOM FLANGE AND THE REMAINING SETS ARE LOCATED INSIDE THE TOP OR BOTTOM FLANGE.

F = THIS DESCRIPTION CODE IS USED TO DEFINE MOMENT CONNECTIONS. BOLTS ARE LOCATED INSIDE THE TOP OR BOTTOM FLANGE AND CONNECTION PLATE PROJECTS 1/2" BEYOND THE TOP OR BOTTOM FLANGE.

I = THIS DESCRIPTION CODE IS USED TO DEFINE MOMENT CONNECTIONS. BOLTS ARE LOCATED INSIDE THE TOP OR BOTTOM FLANGE AND CONNECTION PLATE IS RECESSED 1/8" BELOW THE TOP OR BOTTOM FLANGE.

P = THIS DESCRIPTION CODE IS USED TO DEFINE SHEAR CONNECTIONS. BOLTS ARE LOCATED INSIDE THE TOP FLANGE AND CONNECTION PLATE IS RECESSED 1/8" BELOW THE TOP FLANGE. CONNECTION PLATE LENGTH MUST BE A MINIMUM OF HALF THE RAFTER WEB DEPTH AND SHALL NOT EXCEED THE RAFTER TOTAL DEPTH.

4X = THIS DESCRIPTION CODE IS USED TO DEFINE MOMENT CONNECTIONS. BOLTS ARE LOCATED WITH TWO SETS EACH SIDE OF THE TOP OR BOTTOM FLANGE WITH A GUSSET PLATE OUTSIDE THE TOP AND BOTTOM FLANGE OR COLUMN CAP PLATE.

CONNECTION BOLT DATA

NAME	DESCRIPTION FOR A325 BOLT DIMENSIONS	A325 CONNECTION BOLT DIMENSIONS					
D	DIAMETER OF THE BOLT	1/2"	3/4"	7/8"	1"	1 1/4"	1 1/2"
HD	BOLT HOLE DIAMETER	9/16"	13/16"	15/16"	1 1/16"	1 5/16"	1 9/16"
G	BOLT GAUGE	2 1/2"	3"	4"	3 1/2"	4"	5 1/2"
	MAX. WEB THICKNESS (Max. 5/16" Fillet Weld) WITHOUT WASHER	1"	1 1/8"	1 7/8"	1 1/4"	1 3/8"	2 1/8"
	MAX. WEB THICKNESS (Max. 5/16" Fillet Weld) WITH WASHER	3/4"	7/8"	1 5/8"	7/8"	7/8"	1 7/8"
HG	HEAVY CONN. BOLT GAUGE	N/A	2 1/4"	2 5/8"	3"	3 3/4"	4"
S	NORMAL BOLT SPACING	2 1/2"	3"	3 1/4"	3 1/2"	4"	4 1/2"
BSMIN	MINIMUM SPACING BETWEEN TOP & BOTTOM SETS OF BOLTS	1 1/2"	2 1/4"	2 5/8"	3"	3 3/4"	4"
BSMAX	MAXIMUM BOLT SPACING BETWEEN TOP AND BOTTOM SETS OF BOLTS ON CONNECTION PLATES LESS THAN OR EQUAL TO 3/4" THICK	2'-0"	2'-0"	2'-0"	2'-0"	2'-0"	2'-0"
		SPLICE BOLT SPACING (NOT TO EXCEED 2'-0) 1/2 BSMAX (±1/16") WHEN BSMAX = 2'-0 1/16" TO 4'-0; 1/3 BSMAX (±1/16") WHEN BSMAX = 4'-0 1/16" TO 6'-0; 1/4 BSMAX (±1/16") WHEN BSMAX = 6'-0 1/16" TO 8'-0					
BFCD	MINIMUM BOLT-TO-FLANGE CLEARANCE AT OUT OF NUT SEE BOLT AT FLANGE DETAIL	1 1/2"	1 3/4"	1 7/8"	2 1/4"	2 1/2"	2 3/4"
PF	MINIMUM BOLT-TO-FLANGE CLEARANCE AT CONNECTION PLATE SEE BOLT AT FLANGE DETAIL	(BFCD + RNWT) PF INSIDE OF FLANGE IS INCREASED BASED ON THE YT & YB VALUE. PF FOR CONNECTION B, F, I AND P ARE THE SAME AS USED ON CONNECTION E					
NWT	NUT AND WASHER THICKNESS	SEE BOLT AT FLANGE DETAIL. NUT THICKNESS IS EQUAL TO THE BOLT DIAMETER AND .15625" WASHER THICKNESS IS USED EVEN IF A WASHER IS NOT REQUIRED.					
RNWT	RISE ON NUT AND WASHER THICKNESS						
TT	THICKNESS TOP FLANGE	REFER TO FRAME CROSS SECTION DRAWING FOR LARGEST FLANGE THICKNESS EITHER SIDE OF THE CONNECTION.					
TB	THICKNESS BOTTOM FLANGE						
YT	BOLT SPACING TOP (ROUND UP TO NEXT 1/2", MIN = S)	3" + TT	3 1/2" + TT	3 3/4" + TT	4 1/2" + TT	5" + TT	5 1/2" + TT
YB	BOLT SPACING BOTTOM (ROUND UP TO NEXT 1/2", MIN = S)	or TB Sloped	or TB Sloped	or TB Sloped	or TB Sloped	or TB Sloped	or TB Sloped
EED(S)	MINIMUM SHEARED END EDGE DIMENSION	1 1/4"	1 1/4"	1 1/2"	1 3/4"	2 1/4"	2 5/8"
EED(R)	MINIMUM ROLLED END EDGE DIMENSION	3/4"	1"	1 1/8"	1 1/4"	1 5/8"	2 1/4"
EEDK	END EDGE DIMENSION AT KNEE CONNECTION	1 3/8"	1 3/8"	1 5/8"	1 7/8"	2 3/8"	2 3/4"
BCWM	MINIMUM BOLT CLEARANCE FROM A FLANGE OR WEB WELD — WITHOUT WASHER	7/16"	5/8"	3/4"	13/16"	1"	1 3/8"
	MINIMUM BOLT CLEARANCE FROM A FLANGE OR WEB WELD — WITH HARDENED WASHER	9/16"	3/4"	7/8"	1"	1 1/4"	1 1/2"
WCSM	MINIMUM WIDTH OF CONNECTION PLATE (Standard Connection)	5"	6"	8"	8"	10"	12"
WCHM	MINIMUM WIDTH OF CONNECTION PLATE (Heavy Connection)	N/A	10"	12"	12"	16"	18"
TCMIN	MINIMUM THICKNESS OF CONNECTION PLATE	1/4"	3/8"	7/16"	1/2"	5/8"	1"

B 4E/2EH
- Connection Code (See "Connection Code Format" on this drawing)
- Connection Location

CROSS SECTION CONNECTION CODE KEY
(AS SHOWN AT CONNECTIONS ON FRAME CROSS SECTION DRAWINGS)

Flange Brace Material Schedule	
Part Mark	Material
FB4_	L 2" x 2" x 14 Ga.
FB5_	L 2" x 2" x 14 Ga.
FB6_	L 2" x 2" x 1/8"
FB7_	L 2 1/2" x 2 1/2" x 3/16"

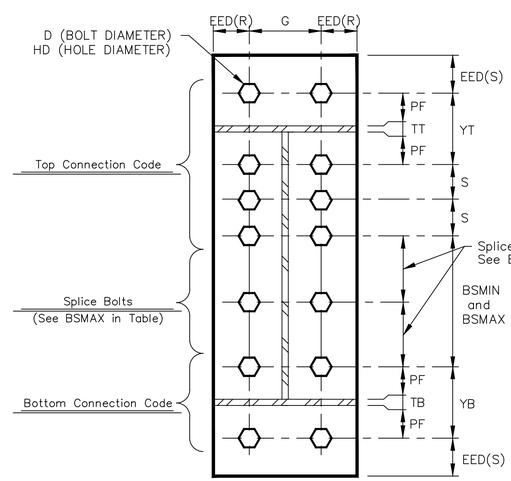

STANDARD CONNECTION DESIGNATION
(CODE 4E/2E SHOWN)

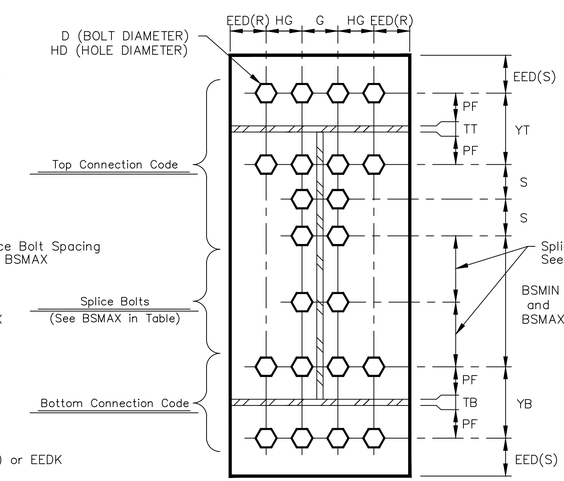

HEAVY CONNECTION DESIGNATION
(CODE 4EH/2EH SHOWN)

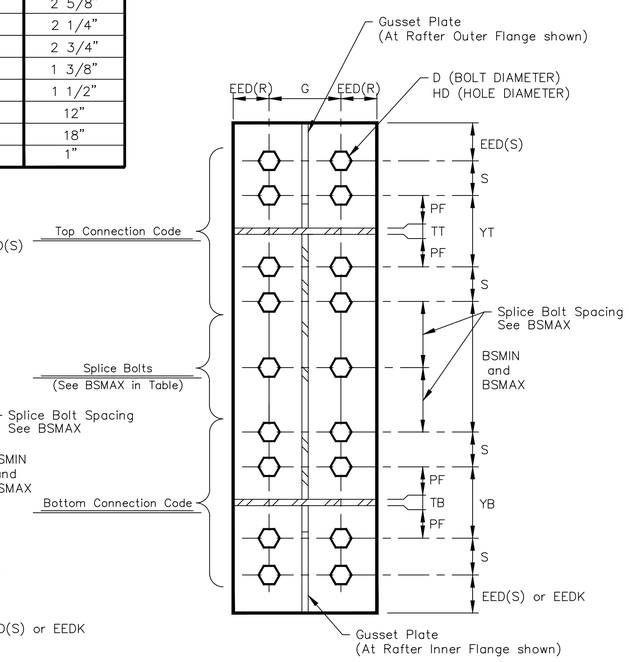

4X CONNECTION DESIGNATION
(CODE 4X/4X SHOWN)

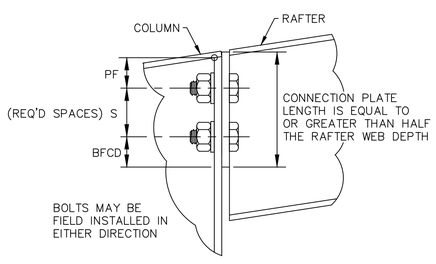

CONNECTION B & P
(Low Side Shown, High Side Similar)

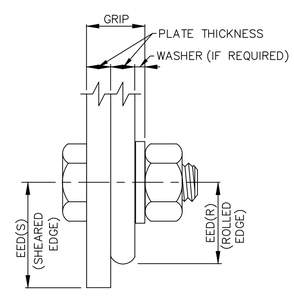

BOLT EDGE DISTANCE

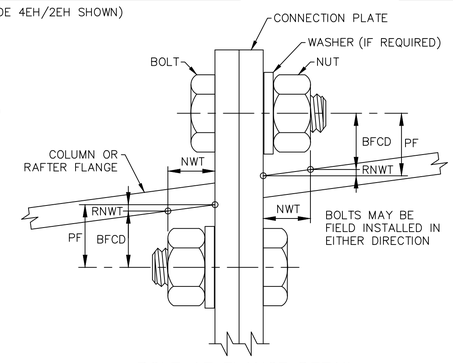

BOLT AT FLANGE DETAIL
(Top Flange Shown, Bottom Flange Similar)

Revision	Date	Description	By	Ck'd

STAR BUILDING SYSTEMS® AN NCI COMPANY
8600 SOUTH I-35 SERVICE RD. OKLAHOMA CITY, OK 73149 (405) 635-2010

Customer: NORTHERN MANAGEMENT SERVICES INC SANDPOINT, ID

Project Name & Location: ALASKA RAILROAD CORPORATION GIRDWOOD, AK

Drawing Status:
- ☐ Preliminary (Not For Construction)
- ☐ For Approval (Not For Construction)
- ☐ For Construction Permit
- ☒ For Erector Installation

Scale: NOT TO SCALE
Drawn by: EBF 5/17/18
Checked by: CLS 5/17/18
Project Engineer: SSY
Job Number: 16-B-42908
Sheet Number: E12 of 12

The engineer whose seal appears hereon is an employee for the manufacturer for the materials described herein. Said seal or certification is limited to the products designed and manufactured by manufacturer only. The undersigned engineer is not the overall engineer of record for this project.

Allen D. Hurtz, P.E.
Alaska P.E. CE-10209
DRSTIC ENSTIA

STATE OF ALASKA
ALLEN D. HURTZ
No. CE-10209
REGISTERED PROFESSIONAL ENGINEER

May 25, 2018