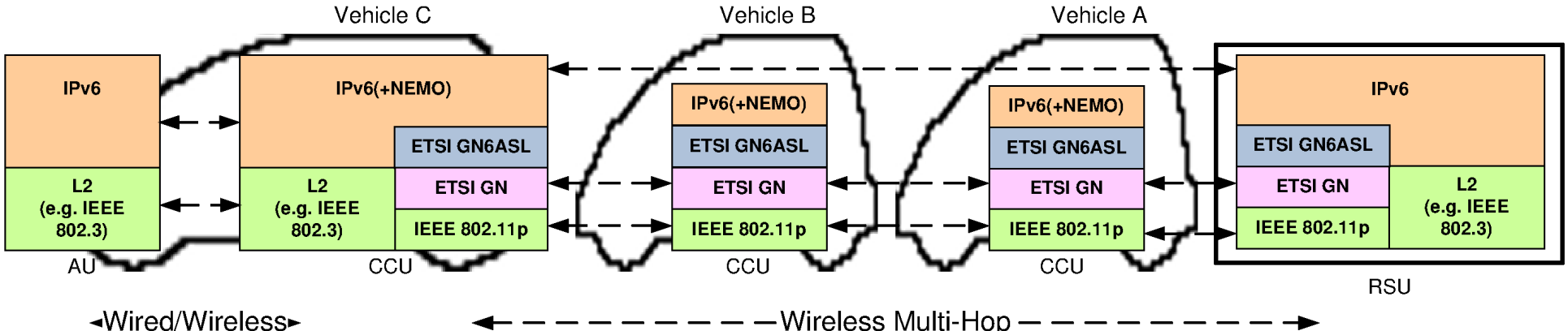
Vehicle C
Vehicle B
Vehicle A
IPv6
L2
(e.g. IEEE
802.3)
AU
IPv6(+NEMO)
ETSI GN6ASL
ETSI GN
IEEE 802.11p
L2
(e.g. IEEE
802.3)
CCU
IPv6(+NEMO)
ETSI GN6ASL
ETSI GN
IEEE 802.11p
CCU
IPv6(+NEMO)
ETSI GN6ASL
ETSI GN
IEEE 802.11p
CCU
IPv6
ETSI GN6ASL
ETSI GN
IEEE 802.11p
L2
(e.g. IEEE
802.3)
RSU
Wired/Wireless
Wireless Multi-Hop