WASHINGTON COUNTY, MARYLAND
DIVISION OF ENGINEERING

INTERSECTION SIGNAL & SIDEWALK IMPROVEMENTS
STOTLER RD. & HALFWAY BLVD.

PROJECT NO. 16-045
CONTRACT NO. TS-SH-045-16

ENGINEER / ARCHITECT DESIGN CERTIFICATION

I HEREBY CERTIFY THIS PLAN FOR SOIL EROSION AND SEDIMENT CONTROL HAS BEEN DESIGNED IN ACCORDANCE WITH LOCAL ORDINANCES, COMAR 26.17.01.07, AND MARYLAND STANDARDS AND SPECIFICATIONS FOR SOIL EROSION AND SEDIMENT CONTROL.

Pamela J. Mohn — SIGNATURE
39252 — REGISTRATION NUMBER
10.7.22 — DATE

SEAL:

STATE OF MARYLAND — PAMELA JEAN MOHN — No. 39252 — PROFESSIONAL ENGINEER

PROFESSIONAL CERTIFICATION. I HEREBY CERTIFY THAT THESE DOCUMENTS WERE PREPARED OR APPROVED BY ME, AND THAT I AM A DULY LICENSED PROFESSIONAL ENGINEER UNDER THE LAWS OF THE STATE OF MARYLAND.

LICENSE No. 39252 EXPIRATION DATE: 6.21.24

THE STORMWATER MANAGEMENT PLAN SHOWN HEREON IS APPROVED.

Scott Hobbs — 10/7/22 DATE
SCOTT HOBBS, P.E.
DIRECTOR OF ENGINEERING
FOR WASHINGTON COUNTY, MD

APPROVED FOR CONSTRUCTION

Scott Hobbs — 10/7/22 DATE
SCOTT HOBBS, P.E.
DIRECTOR OF ENGINEERING
FOR WASHINGTON COUNTY, MD

I/WE HEREBY CERTIFY THAT ALL CLEARING, GRADING, CONSTRUCTION, AND/OR DEVELOPMENT ON THIS SITE WILL BE DONE PURSUANT TO THIS PLAN AND IN ACCORDANCE WITH THE STORM WATER MANAGEMENT, GRADING, SOIL EROSION AND SEDIMENT CONTROL ORDINANCE OF WASHINGTON COUNTY.

10/7/22 — DATE
Scott Hobbs — PRINTED NAME
Scott Hobbs — SIGNATURE OWNER/DEVELOPER

WASHINGTON COUNTY SOIL CONSERVATION DISTRICT
SOIL EROSION AND SEDIMENT CONTROL PLAN APPROVAL
BY: [signature]
DATE: 10/7/2022
(PLAN IS VALID FOR TWO YEARS FROM DATE OF APPROVAL)

OWNER/DEVELOPER:

BOARD OF COUNTY COMMISSIONERS
FOR WASHINGTON COUNTY, MD
AGENT: SCOTT HOBBS, P.E.
DIRECTOR OF ENGINEERING
747 NORTHERN AVENUE
HAGERSTOWN, MARYLAND 21742
PHONE: 240-313-2460
FAX: 240-313-2401

PROJECT SITE

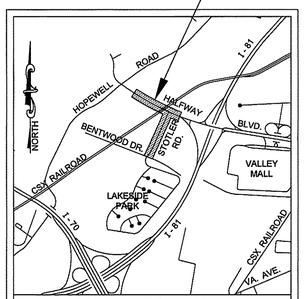

PROJECT VICINITY MAP
SCALE: 1" = 2000'

BOARD OF COUNTY COMMISSIONERS:

JEFFREY A. CLINE, PRESIDENT
TERRY L. BAKER, VICE PRESIDENT
WAYNE K. KEEFER
RANDALL E. WAGNER
CHARLES A. BURKETT JR.

JOHN M. MARTIRANO, COUNTY ADMINISTRATOR

SCOTT HOBBS, P.E., DIRECTOR OF ENGINEERING

DISTURBED AREA QUANTITY

THE TOTAL AREA TO BE DISTURBED SHOWN ON THESE PLANS HAS BEEN DETERMINED TO BE APPROXIMATELY 1.5 ACRES AND THE TOTAL AMOUNT OF EXCAVATION AND FILL SHOWN ON THESE PLANS HAS BEEN DETERMINED TO BE APPROXIMATELY 2,050 CU. YDS. OF EXCAVATION AND APPROXIMATELY 2,450 CU. YDS. OF FILL.

DESIGN DESIGNATION - STOTLER ROAD		
Control	2016	2022
Average Daily Traffic	3426	3151
Design Hourly Volume	410	380
Directional Distribution	50 / 50	50 / 50
% Trucks - ADT	4.9%	6.0%
% Trucks - DHV	7.5%	6.8%
Design Speed	30 M.P.H.	
Functional Classification	LOCAL	
Control Access	LIMITED	
Intensity of Development	RESIDENTIAL / COMMERCIAL	
Terrain	ROLLING	
Anticipated Posted Speed	25 M.P.H.	

INDEX OF SHEET(S):

SHEET No.	SECTION	SHEET TITLE
SHEET 01	TI	COVER SHEET
SHEET 02	GN	GENERAL NOTES
SHEET 03-04	GL	GEOMETRIC LAYOUT
SHEET 05-07	PL	ROADWAY PLAN
SHEET 08-11	PR	CURB PROFILE SHEETS
SHEET 12-19	DE	ROADWAY & REINFORCED SLOPE DETAILS
SHEET 20-24	SG	SIGNAL PLAN & DETAILS
SHEET 25-30	MOT	MAINTENANCE OF TRAFFIC
SHEET 31-35	PMS	PAVEMENT MARKING AND SIGNAGE PLAN
SHEET 36-39	ES	EROSION & SEDIMENT CONTROL
SHEET 40-48	CS	CROSS SECTIONS

Before You Dig Call
"MISS UTILITY"
Service Protection Center
MEMBER ONE CALL SYSTEMS INTERNATIONAL
CALL TOLL FREE
1-800-257-7777

16-045-01

GENERAL NOTES

1. ALL WORK SHALL BE DONE IN ACCORDANCE WITH THE SPECIAL PROVISIONS, THE LATEST EDITION OF THE MDSHA STANDARD SPECIFICATIONS, AND SUPPLEMENTAL SPECIFICATIONS.

2. WHERE REFERENCE IS MADE TO STANDARDS, IT SHALL BE THE CONTRACTOR'S RESPONSIBILITY TO HAVE IN HIS POSSESSION THE MARYLAND SHA BOOK OF STANDARDS FOR HIGHWAY AND INCIDENTAL STRUCTURES WITH THE LATEST UP TO DATE MSHA STANDARDS AS OF THE DATE OF ADVERTISEMENT OF THIS PROJECT.

3. IT SHALL BE THE CONTRACTOR'S RESPONSIBILITY TO HAVE THE LATEST APPROVED SET OF PLANS, SPECIFICATIONS, SPECIAL PROVISIONS, AND ANY REFERENCED MDSHA STANDARDS AS OF NOTICE TO PROCEED.

4. HORIZONTAL CONTROL:
THE COORDINATES FOR THIS PROJECT HAVE BEEN ESTABLISHED BY GPS VALUES BASED ON SURROUNDING NGS, WASHINGTON COUNTY AND CITY OF HAGERSTOWN CONTROL MONUMENTS ADJUSTED TO THE MARYLAND GRID SYSTEM, NAD 83(91).

5. VERTICAL CONTROL:
THE LOCATIONS AND ELEVATIONS BENCHMARKS ARE SHOWN ON PLAN SHEET. PROJECT ELEVATIONS SHOWN ARE IN U.S. SURVEY FEET AND AGREE WITH THE MARYLAND GRID SYSTEM, NAVD 88.

6.. THE CONTRACTOR SHALL BE RESPONSIBLE FOR MAINTAINING AND PROTECTING PROPERTY MARKERS, CONTROL POINTS AND BENCHMARKS FOR THE DURATION OF THE CONTRACT. IT SHALL BE THE RESPONSIBILITY OF THE CONTRACTOR TO REPLACE ANY OF THESE POINTS THAT ARE DISTURBED OR DAMAGED DURING THE CONSTRUCTION PROCESS. WHERE NECESSARY, POINTS SHALL BE REPLACED UNDER THE DIRECT SUPERVISION OF A REGISTERED SURVEYOR TO THE STANDARD WITH WHICH THEY WERE ESTABLISHED.

7. DEFINITION OF TERMS:

PROPOSED RIGHT OF WAY:
DENOTES LAND BELONGING TO COUNTY OR STATE, WHICH CONTAINS THE ROADWAY AND SUPPORTING STRUCTURES.

PERPETUAL EASEMENT:
PORTIONS OF PRIVATE PROPERTY FOR WHICH THE COUNTY HAS ACQUIRED THE RIGHT TO UTILIZE FOR THE INSTALLATION AND MAINTENANCE OF UTILITIES, DRAINAGE STRUCTURES, ETC.

REVERTIBLE EASEMENT:
PORTIONS OF PRIVATE PROPERTY FOR WHICH THE COUNTY HAS ACQUIRED THE RIGHT TO CONSTRUCT AND MAINTAIN SUPPORTING SLOPES AND STRUCTURES FOR THE ROADWAY.

TEMPORARY CONSTRUCTION EASEMENT:
PORTIONS OF PRIVATE PROPERTY ON WHICH THE COUNTY HAS ACQUIRED THE RIGHT TO OCCUPY AND GRADE ON DURING THE PERIOD OF CONSTRUCTION.

8. ALL INVERT ELEVATIONS ARE APPROXIMATE. INVERT ELEVATIONS OF PIPES MAY BE MODIFIED, AS DIRECTED BY THE ENGINEER, TO MEET CONDITIONS ENCOUNTERED DURING INSTALLATION OF DRAINAGE STRUCTURES. ALL PIPES SHALL BE CONSTRUCTED ON UNIFORM GRADE BETWEEN INVERT ELEVATIONS AS NOTED ON THE PLANS, UNLESS OTHERWISE DIRECTED BY THE ENGINEER.

9. THE LOCATIONS AND LENGTHS OF PIPES TO BE INSTALLED SHALL BE VERIFIED BY THE CONTRACTOR PRIOR TO ORDERING.

10. THE CONTRACTOR SHALL MAKE FIELD ADJUSTMENTS TO STORM DRAIN STRUCTURES AS NECESSARY IN ORDER TO MEET FIELD CONDITIONS AS APPROVED THE ENGINEER.

11. ALL DITCHES AND CHANNELS SHALL BE CONSTRUCTED AND STABILIZED IN ACCORDANCE WITH THE DETAILS AND SPECIFICATIONS SHOWN ON THE PLANS.

12. THE CONTRACTOR SHALL MAKE, CHECK, AND BE RESPONSIBLE FOR ALL MEASUREMENTS AND DIMENSIONS NECESSARY FOR THE PROPER CONSTRUCTION OF ALL WORK.

13. THE CONTRACTOR SHALL BE RESPONSIBLE FOR VERIFYING ACTUAL CONDITIONS AND PLANNING ALL CONSTRUCTION ACCORDINGLY. ALL DIMENSIONS SHOWN SHALL BE CHECKED AND VERIFIED IN THE FIELD BY THE CONTRACTOR BEFORE ANY WORK COMMENCES.

14. ANY DAMAGE TO ADJACENT ROADS, YARDS, STRUCTURES, FENCES, SHRUBBERY, ETC., DURING CONSTRUCTION SHALL BE REPLACED IN KIND BY THE CONTRACTOR AT NO ADDITIONAL COST TO THE COUNTY OR THE PROPERTY OWNERS BEFORE ANY WORK COMMENCES.

15. THE CONTRACTOR SHALL GRADE FOR POSITIVE DRAINAGE AT ALL ROADWAY INTERSECTIONS, ENTRANCES, PARKING LOTS, AND YARDS IN CONFORMANCE WITH THE PROPOSED DRAINAGE PATTERNS SHOWN ON THE PLANS.

16. MAILBOXES SHALL BE REMOVED AND RESET BY THE CONTRACTOR AS NECESSARY TO COMPLETE THE WORK. THIS COST IS INCIDENTAL TO THE CLEARING AND GRUBBING ITEM. CONTRACTOR SHALL NOTIFY THE PROPERTY OWNERS AND THE POSTMASTER 48 HRS. PRIOR TO THE REMOVAL OF THE MAILBOXES. THE CONTRACTOR SHALL COORDINATE THE TEMPORARY RELOCATION AND FINAL PLACEMENT OF ALL EXISTING MAILBOXES WITH THE POST OFFICE IN HAGERSTOWN, MD SUCH THAT MAIL DELIVERY IS UNINTERRUPTED.

17. MATERIALS SALVAGED FROM CONSTRUCTION SHALL BECOME THE CONTRACTOR'S PROPERTY UNLESS OTHERWISE NOTED ON THE PLANS OR IN THE SPECIFICATIONS.

18. WORK SITE SAFETY SHALL BE THE SOLE RESPONSIBILITY OF THE CONTRACTOR.

19. THE CONTRACTOR SHALL MAINTAIN ACCESS TO PRIVATE PROPERTY AT ALL TIMES. IF ACCESS MUST BE INTERRUPTED FOR SHORT PERIODS OF TIME, THE INTERRUPTION SHALL BE COORDINATED WITH THE ENGINEER AND THE PROPERTY OWNER.

20. THE CONTRACTOR SHALL BE RESPONSIBLE FOR THE MAINTENANCE OF TRAFFIC THROUGHOUT THE ENTIRE PERIOD OF CONSTRUCTION BY PROVIDING A REASONABLY SMOOTH AND EVEN SURFACE SATISFACTORY FOR THE USE OF PUBLIC TRAFFIC, AND BY PROVIDING ACCESS TO ALL PUBLIC ROADS AND RESIDENTIAL AND COMMERCIAL ENTRANCES AT ALL TIMES.

21. THE CONTRACTOR MUST NOT OCCUPY ANY NON-PERMITTED WETLAND AREAS.

22. THE CONTRACTOR SHALL ADJUST TO PROPOSED GRADE ALL EXISTING MANHOLES, VALVE BOXES, OR OTHER UTILITIES LOCATED WITHIN THE ASPHALT OVERLAY AND FULL DEPTH ASPHALT PAVING AREAS. THIS WORK SHALL BE CONSIDERED INCIDENTAL TO THE ASPHALT PAY ITEMS NECESSARY TO COMPLETE THE WORK.

23. THE CONTRACTOR SHALL ADJUST TO PROPOSED GRADE ALL EXISTING MANHOLES, VALVE BOXES, CLEANOUTS, OR OTHER UTILITIES LOCATED WITHIN THE CONCRETE SIDEWALK. THIS WORK SHALL BE CONSIDERED INCIDENTAL TO THE CONCRETE SIDEWALK ITEMS NECESSARY TO COMPLETE THE WORK.

24. ALL ASPHALT PAVEMENT UTILITY CUTS SHALL BE PERFORMED AND REPAIRED IN ACCORDANCE WITH WASHINGTON COUNTY STANDARDS.

25. IN ANY AREA WHERE ASPHALT THAT IS TO BE REMOVED ADJOINS ASPHALT THAT IS TO REMAIN, THE ASPHALT PAVING SHALL BE SAW CUT IN ORDER TO PROVIDE A CLEAN JOINT BETWEEN THAT WHICH IS TO BE REMOVED AND THAT WHICH IS TO REMAIN.

26. IN AREAS WHERE CONCRETE THAT IS TO BE REMOVED ADJOINS CONCRETE THAT IS TO REMAIN, THE CONCRETE SHALL BE SAW CUT AT THE NEAREST JOINT AND A BITUMINOUS EXPANSION JOINT PROVIDED BETWEEN NEW AND EXISTING WORK. WORK SHALL BE DONE IN ACCORDANCE WITH THE STANDARDS SET FORTH IN THE SPECIFICATIONS AND ON THE APPROVED CONSTRUCTION DRAWINGS.

27. THE CONTRACTOR SHALL OBTAIN A ROADSIDE TREE PERMIT FOR ANY MAINTENANCE, TREATMENT, PLANTING, REMOVAL OR ROOT CUTTING OF TREES WITHIN THE PUBLIC RIGHT OF WAY. REPLACEMENT TREES, IF REQUIRED, WILL BE PROVIDED AND INSTALLED BY THE CONTRACTOR. PERMIT REQUIREMENTS MAY BE OBTAINED FROM THE DEPARTMENT OF NATURAL RESOURCES-MARYLAND FOREST, PARK, AND WILDLIFE SERVICE WHOSE TELEPHONE NUMBER IS (301- 888-1638). THE CONTRACTOR SHALL ALLOW FOR THE TIME INVOLVED IN THE PROCESSING OF THE PERMIT WHEN MAKING APPLICATION.

28. THE CONTRACTOR SHALL BE RESPONSIBLE FOR THE PLACEMENT, MAINTENANCE, RELOCATION, AND OPERATION (INCLUDING UPDATING THE MESSAGE AS REQUIRED) OF THE CHANGEABLE MESSAGE BOARDS THROUGHOUT THE DURATION OF THE PROJECT. THE CONTRACTOR SHALL ALSO PROVIDE A CONTACT AVAILABLE 24 \ 7 FOR REPAIR AND MAINTENANCE

29. CONTRACTOR SHALL NOSE DOWN LAST THREE (3) FEET OF PROPOSED CURB AND GUTTER WHEN NOT TYING INTO EXISTING CURB AND GUTTER.

30. CLEARING AND GRUBBING SHALL OCCUR INSIDE THE PLATTED RIGHT OF WAY UNLESS OTHERWISE DIRECTED BY THE ENGINEER.

31. UTILITIES: THE LOCATIONS OF UNDERGROUND AND AERIAL UTILITIES SHOWN ON THE PLANS ARE FOR INFORMATIONAL PURPOSES ONLY AND ARE NOT TO BE CONSIDERED COMPLETE OR ACCURATE. THE CONTRACTOR SHALL NOTIFY THE FOLLOWING UTILITIES AT LEAST FIVE (5) DAYS PRIOR TO STATING ANY WORK SHOWN ON THESE DRAWINGS. THE CONTRACTOR MUST PROTECT, IN PLACE, ALL ACTIVE UNDERGROUND UTILITIES UNLESS OTHERWISE NOTED ON THE PLANS.

Miss Utility	1-800-257-7777
Washington County Division of Engineering	240-313-2460
Washington County Dept. of Water Quality	240-313-2625
Washington County Soil Conservation District	301-797-6821 (Ext.3)
Potomac Edison (Allegheny Power)	301-582-5266
Columbia Gas (Hagerstown)	240-420-2026
Verizon	301-790-7135
Antietam Cable	240-420-2082
City of Hagerstown Utilities Dept. - Water & Wastewater Division	301-739-8577 (Ext. 650)

32. IF DURING CONSTRUCTION THE CONTRACTOR FINDS THAT CLEARANCES BETWEEN EXISTING UTILITIES AND PROPOSED WORK IS LESS THAN THAT NOTED OR IS LESS THAN SIX INCHES, HE SHALL CONTACT THE ENGINEER FOR INSTRUCTIONS ON HOW TO PROCEED.

33. THE CONTRACTOR MUST PROTECT IN PLACE ANY ACTIVE ABOVE GROUND AND OR UNDERGROUND UTILITIES FOUND UNLESS OTHER TREATMENT IS CALLED FOR. REPAIRS TO UTILITIES OR PROPERTY DAMAGE AS A RESULT OF THE CONTRACTOR'S NEGLIGENCE MUST BE MADE AT THE CONTRACTOR'S EXPENSE BEFORE PROCEEDING WITH CONSTRUCTION. THE COUNTY OR THE PROPERTY OWNER SHALL NOT BEAR ANY COST OR RESPONSIBILITY FOR DAMAGE TO UTILITIES OR PROPERTY AS THE RESULT OF THE CONTRACTOR'S NEGLIGENCE.

34. THE CONTRACTOR SHALL PROTECT AND NOT INTERRUPT EXISTING UTILITY SERVICES DURING CONSTRUCTION, UNLESS AUTHORIZED BY THE ENGINEER. THE CONTRACTOR SHALL SUPPORT EXISTING UNDERGROUND UTILITIES DURING CONSTRUCTION AND THIS SUPPORT SHALL BE INCIDENTAL TO PERTINENT PAY ITEMS. THE LOCATION OF THE UTILITIES SHALL BE VERIFIED BY THE CONTRACTOR.

35. THE CONTRACTOR SHALL COORDINATE THE LOCATION OF THE ELECTRIC POWER AND TELEPHONE SERVICE CONNECTIONS NECESSARY FOR THE FIELD OFFICES AND PROJECT OPERATIONS WITH POTOMAC EDISON COMPANY AND VERIZON TELEPHONE COMPANY. ALL COSTS, MATERIALS, AND INSTALLATION OF SERVICE CONNECTIONS SHALL BE PAID FOR BY THE CONTRACTOR.

36. ALL LAYOUT DIMENSIONS SHOWN ARE TO THE FLOW LINE FACE OF CURB.

SYMBOL LEGEND

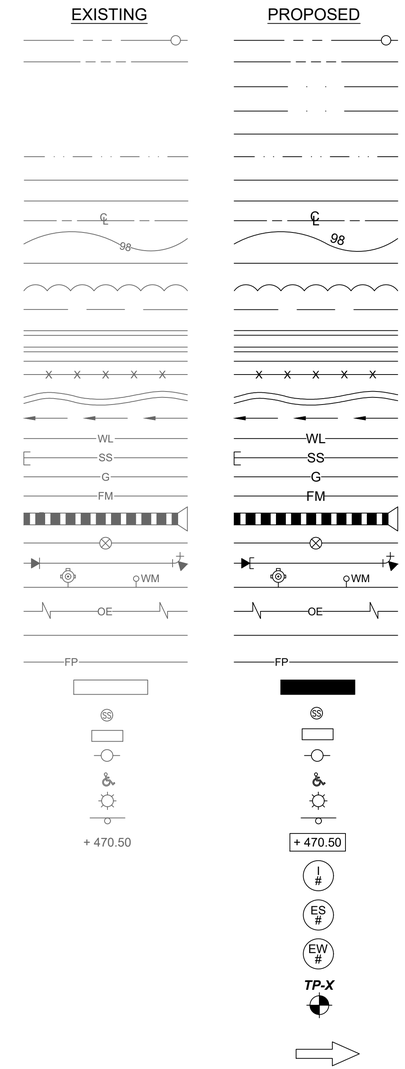

PROPERTY LINE, CORNER
RIGHT-OF-WAY LINE
UTILITIES EASEMENT
TEMP. CONSTRUCTION EASEMENT (T.C.E.)
REVERTIBLE GRADING EASEMENT (R.G.E.)
DRAINAGE EASEMENT
FOREST EASEMENT
STREAM EASEMENT
CENTERLINE
CONTOURS
PROFILE GRADE LINE
TREE LINE
EDGE OF PAVEMENT
CONCRETE CURB
CONCRETE CURB & GUTTER
FENCE LINE
STREAM OR DITCH
FLOW LINE
WATER LINE
SANITARY SEWER LINE, STUB
GAS LINE
FORCE MAIN
STORM DRAIN, END SECTION
WATER VALVE
WATER CAP, REDUCER, BEND
FIRE HYDRANT, METER
OVERHEAD ELECTRIC LINE
TRAFFIC BARRIER
FLOODPLAIN
BUILDINGS.HOUSES, GARAGES
SANITARY SEWER MANHOLE
STORM DRAIN INLET
UTILITY POLE
HANDICAP PARKING
POLE LIGHT
ROAD SIGN
SPOT ELEVATION
INLET NUMBERING
END SECTION NUMBERING
ENDWALL NUMBERING
SOIL BORING LOCATION
DIRECTIONAL FLOW ARROW

ABBREVIATIONS

AASHTO	-AMERICAN ASSOCIATION OF STATE HIGHWAY AND TRANSPORTATION OFFICIALS
ADT	-AVERAGE DAILY TRAFFIC
B.C.	-BOTTOM OF CURB
B.F.C.	-BOTTOM FACE OF CURB
B/L	-BASE LINE
-C-	-CUT
C..B.	-CATCH BASIN
CL	-CENTERLINE
C/O	-CLEANOUT
CONC.	-CONCRETE
CORR.	-CORRECTION
CULV .	-CULVERT
Dc	-DEGREE OF CURVATURE
DS..	-DESIGN SPEED
E	-EXTERNAL
E.B.	-EAST BOUND
EL., ELEV.	-ELEVATION
ESMT.	-EASEMENT
EX.	-EXISTING
-F-	-FILL
G1	-GRADE 1
G2	-GRADE 2
H.S.D	-HEADLIGHT SIGHT DISTANCE
HWALL	-HEADWALL
INV.	-INVERT
K	-RATE OF CHANGE OF GRADE
L	-LENGTH
LOD	-LIMIT OF DISTURBANCE
LP	-LIGHTPOLE
LVC	-LENGTH OF VERTICAL CURVE
MPH	-MILES PER HOUR
MSHA	-MARYLAND STATE HIGHWAY ASSOCIATION
N.P.	-NORTH BOUND
N.T.S.	-NOT TO SCALE
PC	-POINT OF CURVATURE
P.D.E.	-PERPETUAL DRAINAGE EASEMENT
P.G.E.	-PROFILE GRADE ELEVATION
P.G.L.	-PROFILE GRADE LINE
P.I.	-POINT OF INTERSECTION
P/R	-POINT OF ROTATION
PROP.	-PROPOSED
PT.	-POINT OF TANGENCY
PVC	-POINT OF VERTICAL CURVATURE
PVI	-POINT OF VERTICAL INTERSECTION
PVT	-POINT OF VERTICAL TANGENCY
R.	-RADIUS
RCP	-REINFORCED CONCRETE PIPE
R.G.E.	-REVERTIBLE GRADING EASEMENT
R.O.W.	-RIGHT OF WAY
S.B.	-SOUTH BOUND
S.D.	-STORM DRAIN
SHLD	-SHOULDER
S.S.D.	-STOPPING SIGHT DISTANCE
STA.	-STATION
S/W	-SIDEWALK
T	-TANGET
T.C.	-TOP OF CURB
T.C.E.	-TEMPORARY CONSTRUCTION EASEMENT
T.P.	-TEST PIT
TYP.	-TYPICAL
U/BOX	-UTILITY BOX
V.C.	-VERTICAL CURVE
W.B.	-WEST BOUND

NO.	REVISION DESCRIPTION	BY	DATE

DESIGNED BY: PJM
DRAWN BY: GLJ
CHECKED BY: PJM / SH
DATE: 09-15-22

WASHINGTON COUNTY, MARYLAND
DIVISION OF ENGINEERING
Washington County Administrative Annex, Building
747 Northern Avenue, Hagerstown, Maryland, 21742
Phone: 240-313-2460 Fax: 240-313-2401

INTERSECTION SIGNAL & SIDEWALK IMPROVEMENTS
STOTLER RD. & HALFWAY BLVD.
GENERAL NOTES

STATE OF MARYLAND
PAMELA JEAN HORN
No. 39257
PROFESSIONAL ENGINEER
10.7.22

SCALE: NONE
SECTION NO.: GN - 01
SHEET NO.: 02 OF 48
PROJECT NO.: 16-045

K:\CADD\28-281 STOTLER ROAD ADA SIDEWALK\CONSTRUCTION\1 TI - TITLE & GEN NOTES\28-281 GN.DWG Last Saved: 10/5/2022 11:49 AM

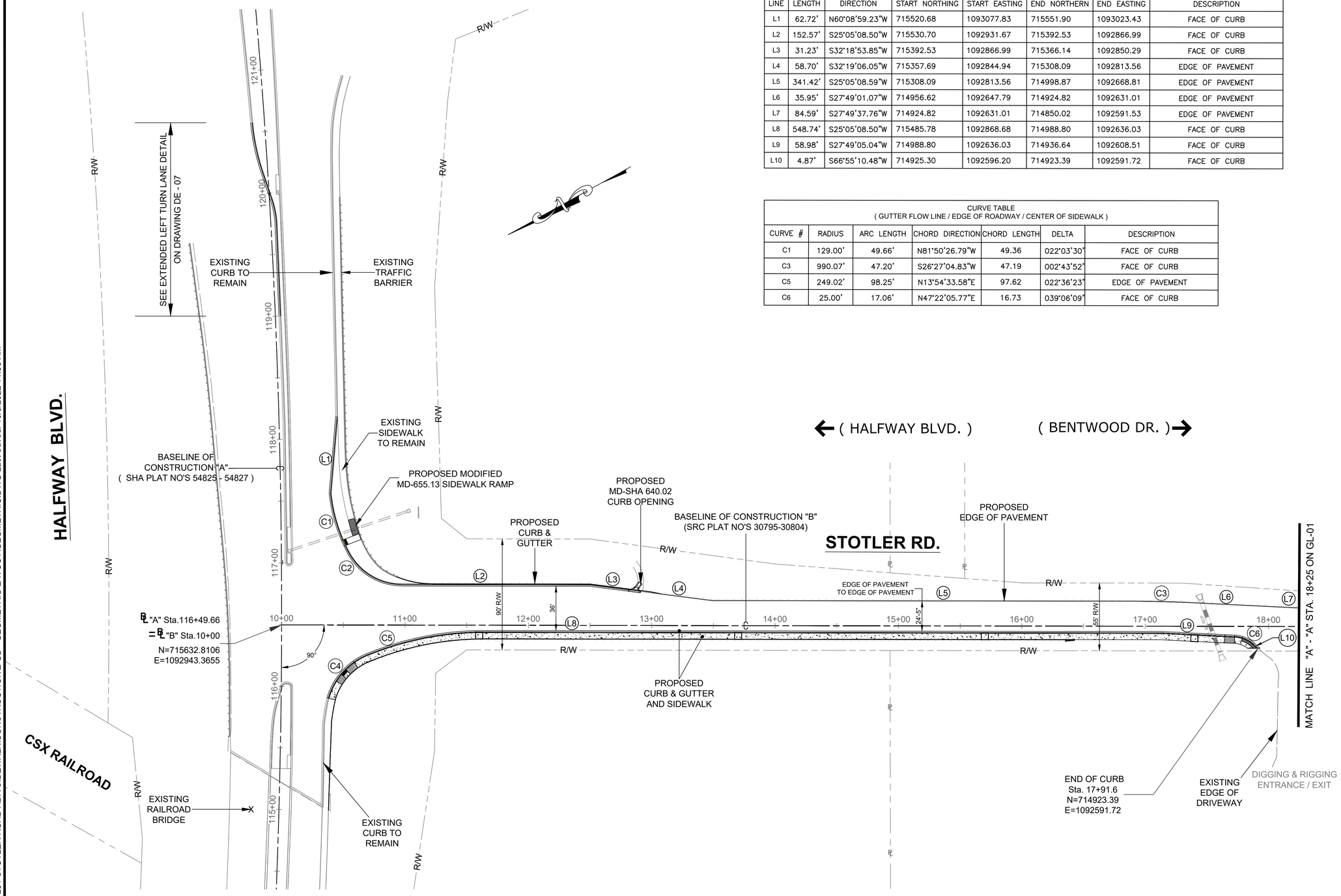

LINE TABLE (GUTTER FLOW LINE / EDGE OF ROADWAY / CENTER OF SIDEWALK)							
LINE	LENGTH	DIRECTION	START NORTHING	START EASTING	END NORTHERN	END EASTING	DESCRIPTION
L1	62.72'	N60°08'59.23"W	715520.68	1093077.83	715551.90	1093023.43	FACE OF CURB
L2	152.57'	S25°05'08.50"W	715530.70	1092931.67	715392.53	1092866.99	FACE OF CURB
L3	31.23'	S32°18'53.85"W	715392.53	1092866.99	715366.14	1092850.29	FACE OF CURB
L4	58.70'	S32°19'06.05"W	715357.69	1092844.94	715308.09	1092813.56	EDGE OF PAVEMENT
L5	341.42'	S25°05'08.59"W	715308.09	1092813.56	714998.87	1092668.81	EDGE OF PAVEMENT
L6	35.95'	S27°49'01.07"W	714956.62	1092647.79	714924.82	1092631.01	EDGE OF PAVEMENT
L7	84.59'	S27°49'37.76"W	714924.82	1092631.01	714850.02	1092591.53	EDGE OF PAVEMENT
L8	548.74'	S25°05'08.50"W	715485.78	1092868.68	714988.80	1092636.03	FACE OF CURB
L9	58.98'	S27°49'05.04"W	714988.80	1092636.03	714936.64	1092608.51	FACE OF CURB
L10	4.87'	S66°55'10.48"W	714925.30	1092596.20	714923.39	1092591.72	FACE OF CURB

CURVE TABLE (GUTTER FLOW LINE / EDGE OF ROADWAY / CENTER OF SIDEWALK)						
CURVE #	RADIUS	ARC LENGTH	CHORD DIRECTION	CHORD LENGTH	DELTA	DESCRIPTION
C1	129.00'	49.66'	N81°50'26.79"W	49.36	022°03'30"	FACE OF CURB
C3	990.07'	47.20'	S26°27'04.83"W	47.19	002°43'52"	FACE OF CURB
C5	249.02'	98.25'	N13°54'33.58"E	97.62	022°36'23"	EDGE OF PAVEMENT
C6	25.00'	17.06'	N47°22'05.77"E	16.73	039°06'09"	FACE OF CURB

NO.	REVISION DESCRIPTION	BY	DATE

DESIGNED BY: PJM
DRAWN BY: GLJ
CHECKED BY: PJM
DATE: 09-15-22

WASHINGTON COUNTY, MARYLAND
DIVISION OF ENGINEERING

Washington County Administrative Annex, Building
80 W. Baltimore St., Hagerstown, MD 21740
Phone: 240-313-2460 Fax: 240-313-2401

INTERSECTION SIGNAL & SIDEWALK IMPROVEMENTS
STOTLER RD. & HALFWAY BLVD.
GEOMETRIC LAYOUT

STATE OF MARYLAND
PAMELA JEAN WOOTON
No. 39252
PROFESSIONAL ENGINEER
10.7.22

SCALE
1" = 40'

SECTION NO.
GL - 01

SHEET NO.
03 OF 48

PROJECT NO.
16-045

K:\CADD\28-281 STOTLER ROAD ADA SIDEWALK\CONSTRUCTION\2 GD - GEOMETRIC LAYOUT\GEOMETRIC.DWG Last Saved: 10/5/2022 11:53 AM

CURVE TABLE (GUTTER FLOW LINE / EDGE OF ROADWAY / CENTER OF SIDEWALK)						
CURVE #	RADIUS	ARC LENGTH	CHORD DIRECTION	CHORD LENGTH	DELTA	DESCRIPTION
C7	15.00'	13.94'	N01°11'18.24"W	13.44	053°14'51"	FACE OF CURB
C8	1420.48'	47.06'	N26°06'26.56"E	47.06	001°53'54"	FACE OF CURB
C9	75.00'	111.10'	N69°29'35.42"E	101.22	084°52'24"	FACE OF CURB
C10	35.00'	22.90'	S15°02'40.31"W	22.50	037°29'42"	FACE OF CURB
C11	50.00'	31.30'	S51°43'42.16"W	30.80	035°52'21"	FACE OF CURB

LINE TABLE (GUTTER FLOW LINE / EDGE OF ROADWAY / CENTER OF SIDEWALK)							
LINE	LENGTH	DIRECTION	START NORTHING	START EASTING	END NORTHERN	END EASTING	DESCRIPTION
L11	23.52'	S24°18'03.17"W	714859.34	1092568.34	714837.90	1092558.66	FACE OF CURB
L12	7.52'	N68°04'12.78"W	714760.18	1092443.15	714762.99	1092436.17	FACE OF CURB
L13	214.96'	S33°47'31.50"W	714666.64	1092461.40	714488.00	1092341.84	FACE OF CURB
L14	14.31'	S69°39'52.81"W	714468.92	1092317.67	714463.95	1092304.25	FACE OF CURB

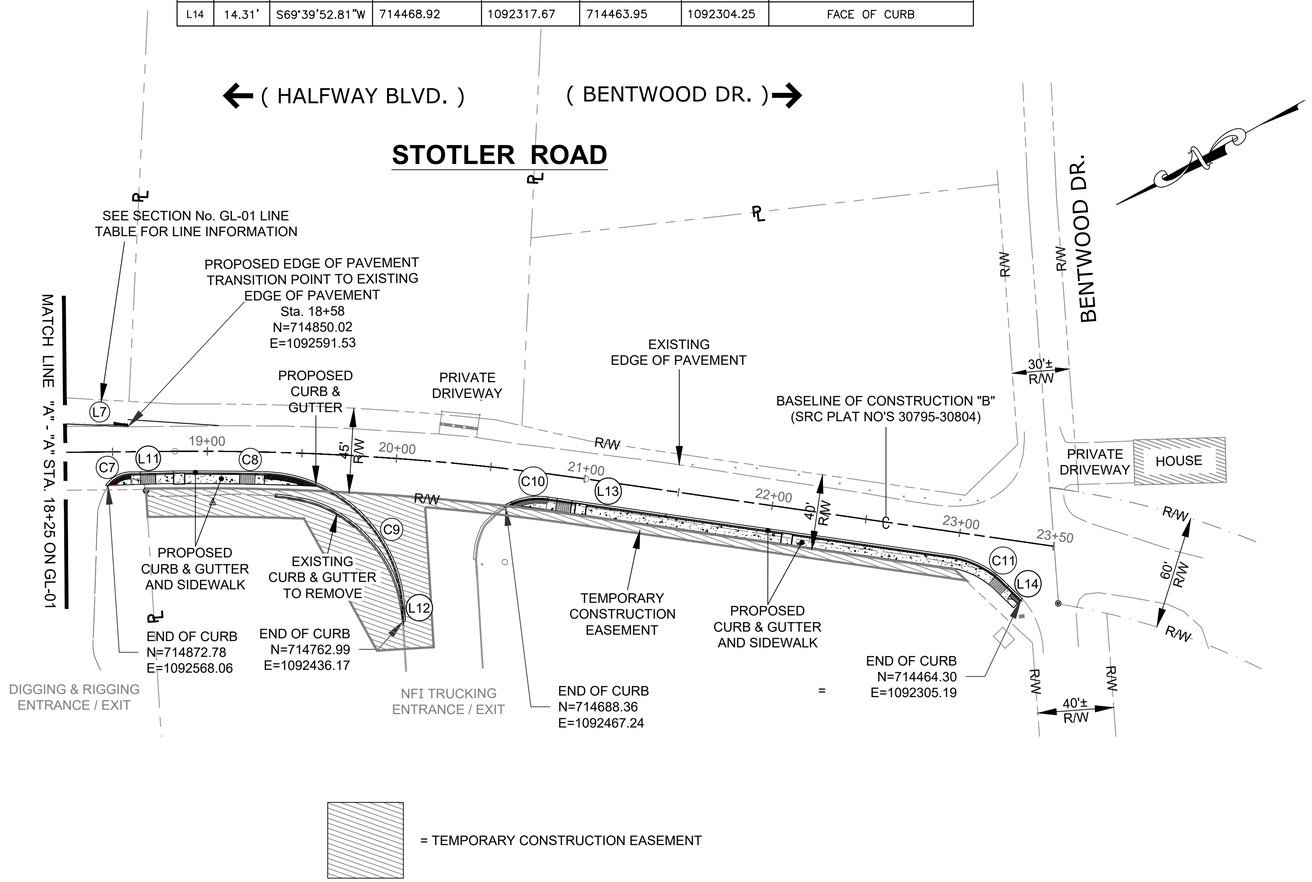

K:\CADD\28-281 STOTLER ROAD ADA SIDEWALK\CONSTRUCTION\2 GD - GEOMETRIC LAYOUT\GEOMETRIC.DWG Last Saved: 10/5/2022 11:53 AM

NO.	REVISION DESCRIPTION	BY	DATE

DESIGNED BY: PJM
DRAWN BY: GLJ
CHECKED BY: PJM
DATE: 09-15-22

WASHINGTON COUNTY, MARYLAND
DIVISION OF ENGINEERING

Washington County Administrative Annex, Building
80 W. Baltimore St., Hagerstown, MD 21740
Phone: 240-313-2460 Fax: 240-313-2401

INTERSECTION SIGNAL & SIDEWALK IMPROVEMENTS
STOTLER RD. & HALFWAY BLVD.
GEOMETRIC LAYOUT

STATE OF MARYLAND
PAMELA JEAN MOHN
No. 39232
PROFESSIONAL ENGINEER
10.7.22

SCALE
1" = 40'

SECTION NO.
GL - 02

SHEET NO.
04 OF 48

PROJECT NO.
16-045

REMOVE EXISTING CONCRETE SIDEWALK	
STATION	SF
Sta. 112+87 ℄"A" RT. To Sta. 113+27 ℄"A" RT.	219
Sta. 115+91 ℄"A" RT. To Sta. 10+90 ℄"B" RT.	322
Sta. 11+05 ℄"B" LT. To Sta. 117+34 ℄"A" RT.	391

REMOVE EXISTING TRAFFIC BARRIER W-BEAM	
STATION	LF
Sta. 107+50 ℄"A" RT. To Sta. 113+27 ℄"A" RT.	612
Sta. 115+00 ℄"A" RT. To Sta. 11+75 ℄"B" RT.	240
Sta. 10+93 ℄"B" LT. To Sta. 11+75 ℄"B" LT.	84

REMOVE EXISTING SIGNS IN CONCRETE ISLAND		
STATION	EA	REMARKS
Sta. 116+75± ℄"A" RT.	1	US 81 ROUTE SIGN
Sta. 116+75± ℄"A" RT.	1	NO OUTLET SIGN
Sta. 116+75± ℄"A" RT.	1	STOP & STEET ID SIGNS

REMOVE EXISTING CONCRETE CURB AND GUTTER		
STATION	LF	REMARKS
Sta. 115+91 ℄"A" RT. To Sta. 11+00 ℄"B" RT.	82	
Sta. 11+75 ℄"B" LT. To Sta. 118+18 ℄"A" RT.	238	
Sta. 119+00 ℄"A" RT. To Sta. 120+58 ℄"A" LT.	160	LEFT TURN LANE (HALFWAY BLVD.)

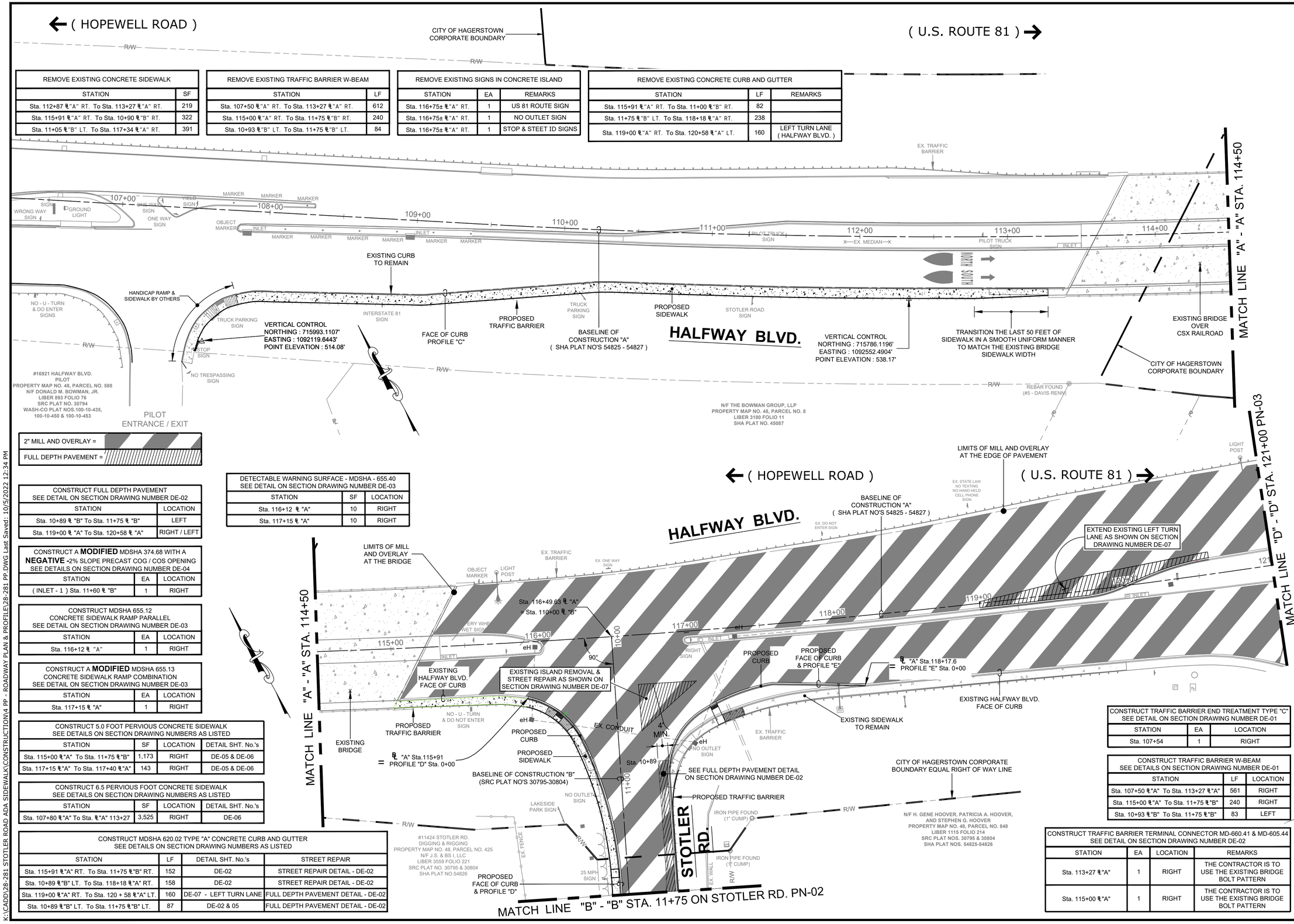

2" MILL AND OVERLAY =

FULL DEPTH PAVEMENT =

CONSTRUCT FULL DEPTH PAVEMENT SEE DETAIL ON SECTION DRAWING NUMBER DE-02	
STATION	LOCATION
Sta. 10+89 ℄ "B" To Sta. 11+75 ℄ "B"	LEFT
Sta. 119+00 ℄ "A" To Sta. 120+58 ℄ "A"	RIGHT / LEFT

CONSTRUCT A **MODIFIED** MDSHA 374.68 WITH A **NEGATIVE** -2% SLOPE PRECAST COG / COS OPENING SEE DETAILS ON SECTION DRAWING NUMBER DE-04		
STATION	EA	LOCATION
(INLET - 1) Sta. 11+60 ℄ "B"	1	RIGHT

CONSTRUCT MDSHA 655.12 CONCRETE SIDEWALK RAMP PARALLEL SEE DETAIL ON SECTION DRAWING NUMBER DE-03		
STATION	EA	LOCATION
Sta. 116+12 ℄ "A"	1	RIGHT

CONSTRUCT A **MODIFIED** MDSHA 655.13 CONCRETE SIDEWALK RAMP COMBINATION SEE DETAIL ON SECTION DRAWING NUMBER DE-03		
STATION	EA	LOCATION
Sta. 117+15 ℄ "A"	1	RIGHT

CONSTRUCT 5.0 FOOT PERVIOUS CONCRETE SIDEWALK SEE DETAILS ON SECTION DRAWING NUMBERS AS LISTED			
STATION	SF	LOCATION	DETAIL SHT. No.'s
Sta. 115+00 ℄"A" To Sta. 11+75 ℄"B"	1,173	RIGHT	DE-05 & DE-06
Sta. 117+15 ℄"A" To Sta. 117+40 ℄"A"	143	RIGHT	DE-05 & DE-06

CONSTRUCT 6.5 PERVIOUS FOOT CONCRETE SIDEWALK SEE DETAILS ON SECTION DRAWING NUMBERS AS LISTED			
STATION	SF	LOCATION	DETAIL SHT. No.'s
Sta. 107+80 ℄"A" To Sta. ℄"A" 113+27	3,525	RIGHT	DE-06

CONSTRUCT MDSHA 620.02 TYPE "A" CONCRETE CURB AND GUTTER SEE DETAILS ON SECTION DRAWING NUMBERS AS LISTED			
STATION	LF	DETAIL SHT. No.'s	STREET REPAIR
Sta. 115+91 ℄"A" RT. To Sta. 11+75 ℄"B" RT.	152	DE-02	STREET REPAIR DETAIL - DE-02
Sta. 10+89 ℄"B" LT. To Sta. 118+18 ℄"A" RT.	158	DE-02	STREET REPAIR DETAIL - DE-02
Sta. 119+00 ℄"A" RT. To Sta. 120 + 58 ℄"A" LT.	160	DE-07 - LEFT TURN LANE	FULL DEPTH PAVEMENT DETAIL - DE-02
Sta. 10+89 ℄"B" LT. To Sta. 11+75 ℄"B" LT.	87	DE-02 & 05	FULL DEPTH PAVEMENT DETAIL - DE-02

DETECTABLE WARNING SURFACE - MDSHA - 655.40 SEE DETAIL ON SECTION DRAWING NUMBER DE-03		
STATION	SF	LOCATION
Sta. 116+12 ℄ "A"	10	RIGHT
Sta. 117+15 ℄ "A"	10	RIGHT

CONSTRUCT TRAFFIC BARRIER END TREATMENT TYPE "C" SEE DETAIL ON SECTION DRAWING NUMBER DE-01		
STATION	EA	LOCATION
Sta. 107+54	1	RIGHT

CONSTRUCT TRAFFIC BARRIER W-BEAM SEE DETAILS ON SECTION DRAWING NUMBER DE-01		
STATION	LF	LOCATION
Sta. 107+50 ℄"A" To Sta. 113+27 ℄"A"	561	RIGHT
Sta. 115+00 ℄"A" To Sta. 11+75 ℄"B"	240	RIGHT
Sta. 10+93 ℄"B" To Sta. 11+75 ℄"B"	83	LEFT

CONSTRUCT TRAFFIC BARRIER TERMINAL CONNECTOR MD-660.41 & MD-605.44 SEE DETAIL ON SECTION DRAWING NUMBER DE-02			
STATION	EA	LOCATION	REMARKS
Sta. 113+27 ℄"A"	1	RIGHT	THE CONTRACTOR IS TO USE THE EXISTING BRIDGE BOLT PATTERN
Sta. 115+00 ℄"A"	1	RIGHT	THE CONTRACTOR IS TO USE THE EXISTING BRIDGE BOLT PATTERN

NO.	REVISION DESCRIPTION	BY	DATE

DESIGNED BY: PJM
DRAWN BY: GLJ
CHECKED BY: PJM
DATE: 09-15-22

WASHINGTON COUNTY, MARYLAND
DIVISION OF ENGINEERING

Washington County Administrative Annex, Building
747 Northern Avenue, Hagerstown, Maryland, 21742
Phone: 240-313-2460 Fax: 240-313-2401

INTERSECTION SIGNAL & SIDEWALK IMPROVEMENTS
STOTLER RD. & HALFWAY BLVD.
HALFWAY BLVD. - PLAN SHEET

STATE OF MARYLAND PAMELA JEAN HORN No. 39257 PROFESSIONAL ENGINEER
10.7.22

SCALE 1" = 30'
SECTION NO. PN - 01
SHEET NO. 05 OF 48
PROJECT NO. 16-045

K:\CADD\28-281 STOTLER ROAD ADA SIDEWALK\CONSTRUCTION\4 PP - ROADWAY PLAN & PROFILE\28-281 PP.DWG Last Saved: 10/5/2022 12:34 PM

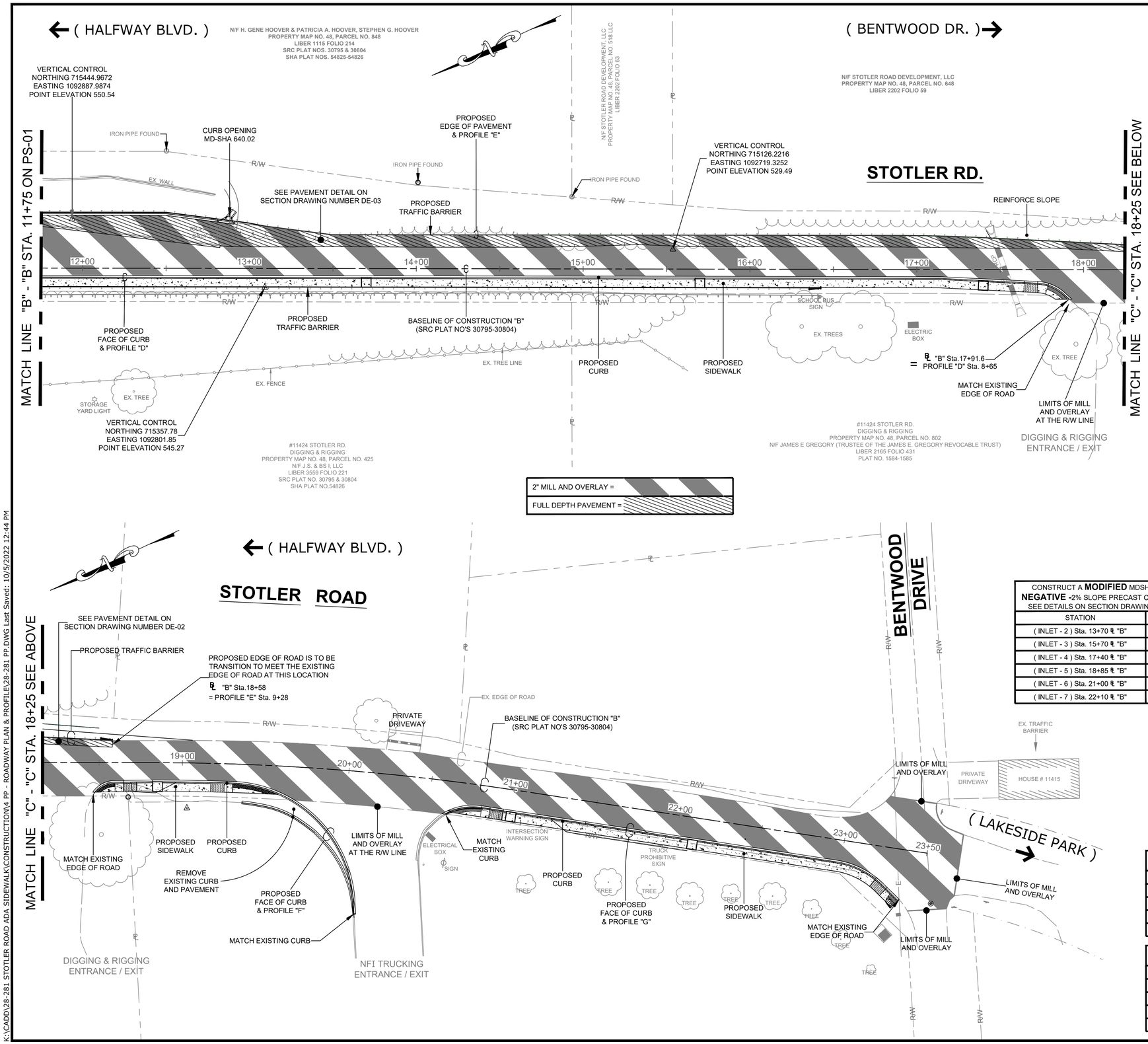

CONSTRUCT REINFORCE SLOPE SEE DETAIL ON SECTION DRAWING NUMBER DE-08	
STATION	SF
Sta. 14+75 ℄"B" LT. To Sta. 18+00 ℄"B" LT.	2,062

REMOVE EXISTING CONCRETE CURB AND GUTTER	
STATION	LF
Sta. 11+75 ℄"B" LT. To Sta. 12+82 ℄"B" LT.	108
Sta. 19+37 ℄"B" RT. To Sta. 20+11 ℄"B" RT.	104
Sta. 20+60 ℄"B" RT. To Sta. 20+78 ℄"B" RT.	18

REMOVE EXISTING TRAFFIC BARRIER W-BEAM	
STATION	LF
Sta. 11+75 ℄"B" LT. To Sta. 17+95 ℄"B" LT.	619
Sta. 11+75 ℄"B" RT. To Sta. 16+43 ℄"B" RT.	467

REMOVE EXISTING CONCRETE CURB OPENING	
STATION	EA
Sta. 12+88 ℄"B" LT.	1

CONSTRUCT A CONCRETE SIDEWALK RAMP REINFORCE LANDING SEE DETAIL ON SECTION DRAWING NUMBER DE-03		
STATION	EA	LOCATION
Sta. 17+86 ℄ "B"	1	RIGHT
Sta. 18+53 ℄ "B"	1	RIGHT
Sta. 19+45 ℄ "B"	1	RIGHT
Sta. 20+72 ℄ "B"	1	RIGHT
Sta. 23+35 ℄ "B"	1	RIGHT

DETECTABLE WARNING SURFACE MDSHA - 655.40 SEE DETAIL ON SECTION DRAWING NUMBER DE-03		
STATION	SF	LOCATION
Sta. 17+86 ℄ "B"	26	RIGHT
Sta. 18+53 ℄ "B"	23	RIGHT
Sta. 19+45 ℄ "B"	50	RIGHT
Sta. 20+72 ℄ "B"	33	RIGHT
Sta. 23+35 ℄ "B"	10	RIGHT

CONSTRUCT A **MODIFIED** MDSHA 374.68 WITH A **NEGATIVE** -2% SLOPE PRECAST COG / COS OPENING SEE DETAILS ON SECTION DRAWING NUMBER DE-04		
STATION	EA	LOCATION
(INLET - 2) Sta. 13+70 ℄ "B"	1	RIGHT
(INLET - 3) Sta. 15+70 ℄ "B"	1	RIGHT
(INLET - 4) Sta. 17+40 ℄ "B"	1	RIGHT
(INLET - 5) Sta. 18+85 ℄ "B"	1	RIGHT
(INLET - 6) Sta. 21+00 ℄ "B"	1	RIGHT
(INLET - 7) Sta. 22+10 ℄ "B"	1	RIGHT

CONSTRUCT TRAFFIC BARRIER W-BEAM SEE DETAILS ON SECTION DRAWING NUMBER DE-01		
STATION	LF	LOCATION
Sta. 11+75 ℄"B" To Sta. 18+58 ℄"B"	651	LEFT
Sta. 11+75 ℄"B" To Sta. 16+43 ℄"B"	434	RIGHT

CONSTRUCT TRAFFIC BARRIER END TREATMENT TYPE "C" SEE DETAIL ON SECTION DRAWING NUMBER DE-01		
STATION	EA	LOCATION
Sta. 18+24 To Sta. 18+58 - ℄"B"	1	LEFT
Sta. 16+09 To Sta. 16+43 - ℄"B"	1	RIGHT

CONSTRUCT STANDARD CURB OPENING MDSHA-640.02 SEE DETAIL ON SECTION DRAWING NUMBER DE-01		
STATION	EA	LOCATION
Sta. 12+86 ± ℄"B"	1	LEFT

36" RCP EXTENSION	
STATION	LF
Sta. 17+46 ± ℄"B" LT. EXTEND EXISTING 36" RCP 6 LF ± FLUSH WITH THE PROPOSED REINFORCED SLOPE. MAINTAIN EXISTING PIPE GRADE. REATTACH END SECTION	6

CONSTRUCT MDSHA 620.02 TYPE "A" CONCRETE CURB AND GUTTER SEE DETAILS ON SECTION DRAWING NUMBER DE-02		
STATION	LF	REMARKS
Sta. 11+75 ℄"B" LT. To Sta. 12+81 ℄"B" LT.	107	PAVEMENT DETAIL - DE-02
Sta. 11+75 ℄"B" RT. To Sta. 17+92 ± ℄"B" RT.	601	STREET REPAIR DETAIL - DE-02
Sta. 18+48 ± ℄"B" RT. To Sta. 20+11 ± ℄"B" RT.	198	STREET REPAIR DETAIL - DE-02
Sta. 20+60 ± ℄"B" RT. To Sta. 23+37 ± ℄"B" RT.	270	STREET REPAIR DETAIL - DE-02

CONSTRUCT 5.0 FOOT PERVIOUS CONCRETE SIDEWALK SEE DETAILS ON SECTION DRAWING NUMBERS DE-05 & DE-06			
STATION	SF	LOCATION	REMARKS
Sta. 11+75 ℄"B" To Sta. 16+43 ℄"B"	2,273	RIGHT	WITH TRAFFIC BARRIER
Sta. 16+43 ℄"B" To Sta. 17+91 ± ℄"B"	699	RIGHT	WITHOUT TRAFFIC BARRIER
Sta. 18+48 ± ℄"B" To Sta. 19+58± ℄"B"	453	RIGHT	WITHOUT TRAFFIC BARRIER
Sta. 20+63 ± ℄"B" To Sta. 23+36 ± ℄"B"	1,290	RIGHT	WITHOUT TRAFFIC BARRIER

NO.	REVISION DESCRIPTION	BY	DATE

DESIGNED BY: PJM
DRAWN BY: GLJ
CHECKED BY: PJM
DATE: 09-15-22

WASHINGTON COUNTY, MARYLAND
DIVISION OF ENGINEERING

Washington County Administrative Annex Building
747 Northern Avenue, Hagerstown, Maryland, 21742
Phone: 240-313-2460 Fax: 240-313-2401

INTERSECTION SIGNAL & SIDEWALK IMPROVEMENTS
STOTLER RD. & HALFWAY BLVD.
STOTLER ROAD - PLAN SHEET

STATE OF MARYLAND
PAMELA JEAN NOH
No. 39252
PROFESSIONAL ENGINEER
10.7.22

SCALE
1" = 30'

SECTION NO.
PN - 02

SHEET NO.
06 OF 48

PROJECT NO.
16-045

K:\CADD\28-281 STOTLER ROAD ADA SIDEWALK\CONSTRUCTION\4 PP - ROADWAY PLAN & PROFILE\28-281 PP.DWG Last Saved: 10/5/2022 12:44 PM

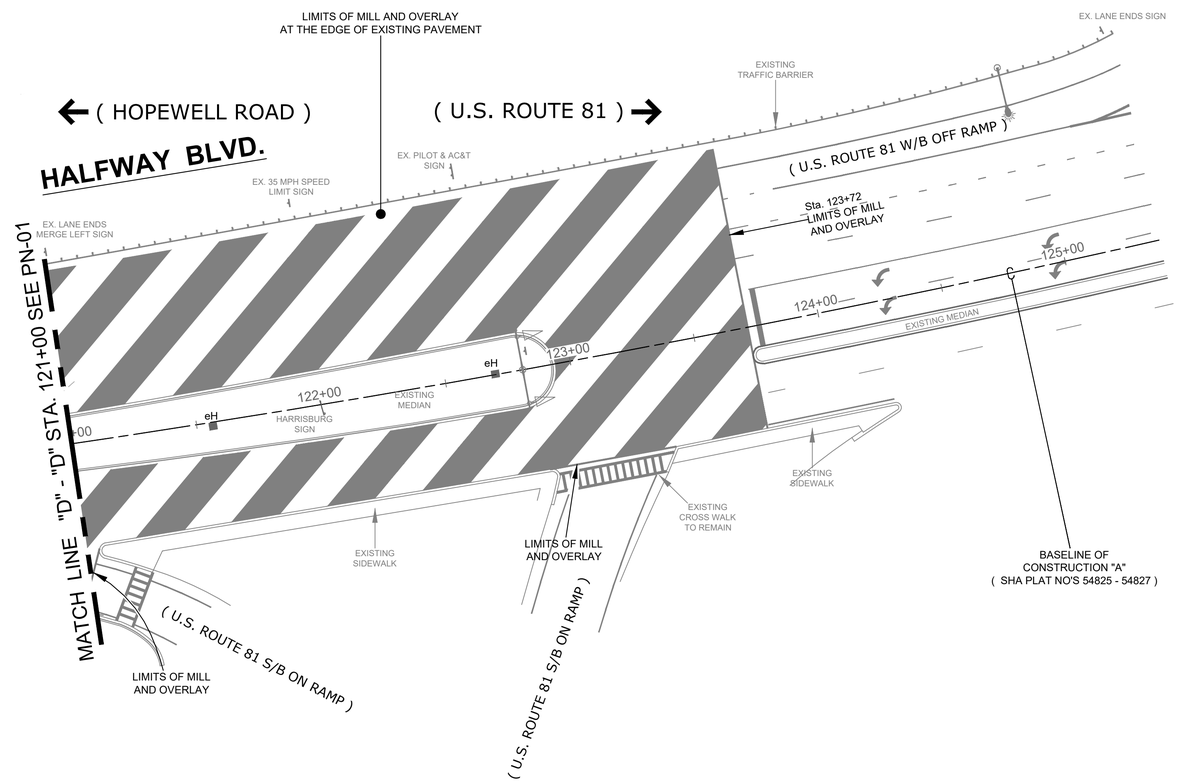

NO.	REVISION DESCRIPTION	BY	DATE

DESIGNED BY: PJM
DRAWN BY: GLJ
CHECKED BY: PJM
DATE: 09-15-22

WASHINGTON COUNTY, MARYLAND
DIVISION OF ENGINEERING

Washington County Administrative Annex, Building
747 Northern Avenue, Hagerstown, Maryland, 21742
Phone: 240-313-2460 Fax: 240-313-2401

INTERSECTION SIGNAL& SIDEWALK IMPROVEMENTS
STOTLER RD. & HALFWAY BLVD.
HALFWAY BLVD. - PLAN SHEET

STATE OF MARYLAND
PAMELA JEAN MOHN
No. 39253
PROFESSIONAL ENGINEER
10.7.22

SCALE
1" = 30'

SECTION NO.
PN - 03

SHEET NO.
07 OF 48

PROJECT NO.
16-045

K:\CADD\28-281 STOTLER ROAD ADA SIDEWALK\CONSTRUCTION\4 PP - ROADWAY PLAN & PROFILE\28-281 PP.DWG Last Saved: 10/5/2022 12:47 PM

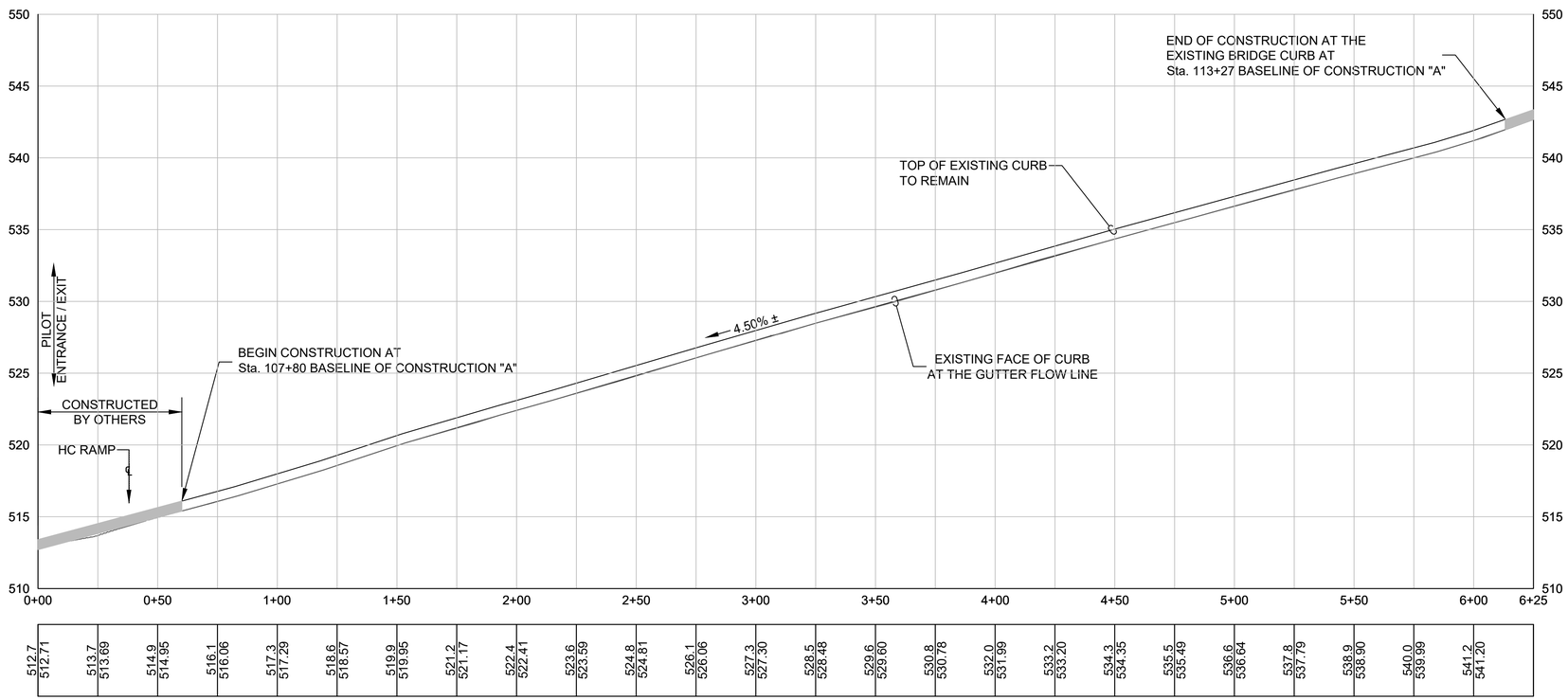

HALFWAY BOULEVARD - SOUTH SIDE
FACE OF CURB PROFILE "C"

K:\CADD\28-281 STOTLER ROAD ADA SIDEWALK\CONSTRUCTION\4 PP - ROADWAY PLAN & PROFILE\28-281 PP.DWG Last Saved: 10/5/2022 12:48 PM

NO.	REVISION DESCRIPTION	BY	DATE

DESIGNED BY: PJM
DRAWN BY: GLJ
CHECKED BY: PJM
DATE: 09-15-22

WASHINGTON COUNTY, MARYLAND
DIVISION OF ENGINEERING

Washington County Administrative Annex, Building
747 Northern Avenue, Hagerstown, Maryland, 21742
Phone: 240-313-2460 Fax: 240-313-2401

INTERSECTION SIGNAL&
SIDEWALK IMPROVEMENTS
STOTLER RD. & HALFWAY BLVD.
HALFWAY BLVD. - PROFILE SHEET

STATE OF MARYLAND
PAMELA JEAN NOHN
No. 39352
PROFESSIONAL ENGINEER
10.7.22

SCALE
1" = 30' H / 1" = 5' V

SECTION NO.
PR - 01

SHEET NO.
08 OF 48

PROJECT NO.
16-045

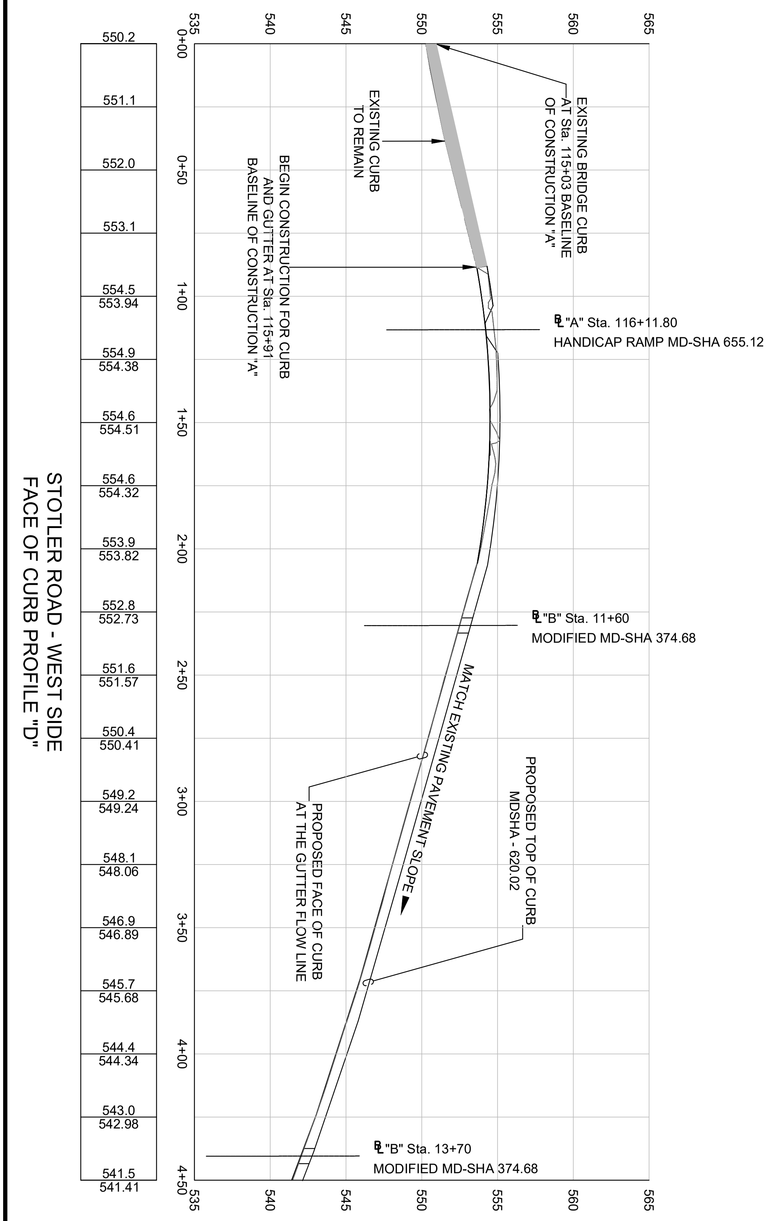

STOTLER ROAD - WEST SIDE
FACE OF CURB PROFILE "D"

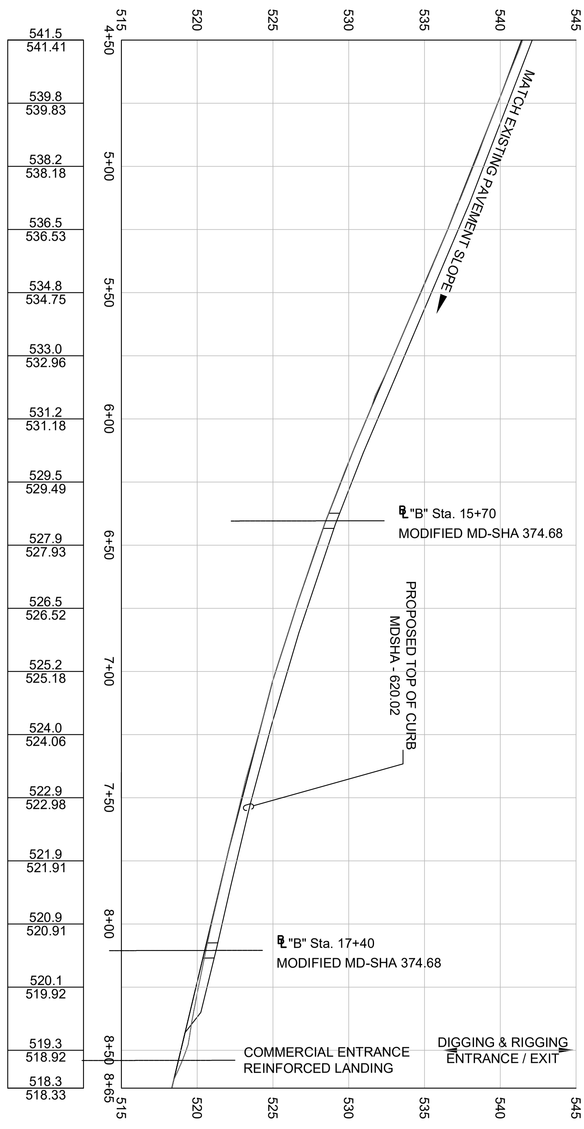

STOTLER ROAD - WEST SIDE
FACE OF CURB PROFILE "D"

PROJECT NO. 16-045	SHEET NO. 09 OF 48	SECTION NO. PR - 02	SCALE 1" = 30' H / 1" = 5' V	STATE OF MARYLAND PAMELA J. TEAGUE-MOTHY PROFESSIONAL ENGINEER No. 21352	INTERSECTION SIGNAL& SIDEWALK IMPROVEMENTS STOTLER RD. & HALFWAY BLVD. STOTLER ROAD - PROFILE - D	WASHINGTON COUNTY, MARYLAND DIVISION OF ENGINEERING Washington County Administrative Annex. Building 747 Northern Avenue, Hagerstown, Maryland, 21742 Phone: 240-313-2460 Fax: 240-313-2401	DESIGNED BY: PJM DRAWN BY: GLJ CHECKED BY: PJM DATE: 09-15-22	NO.	REVISION DESCRIPTION	BY	DATE

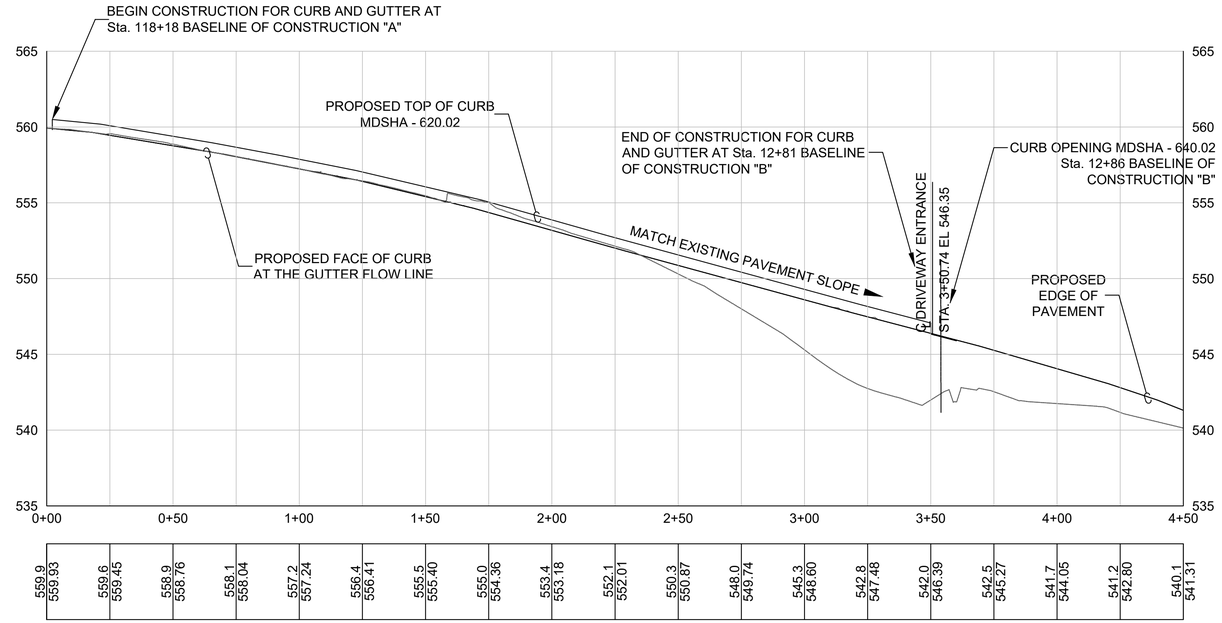

STOTLER ROAD - EAST SIDE
FACE OF CURB PROFILE "E"

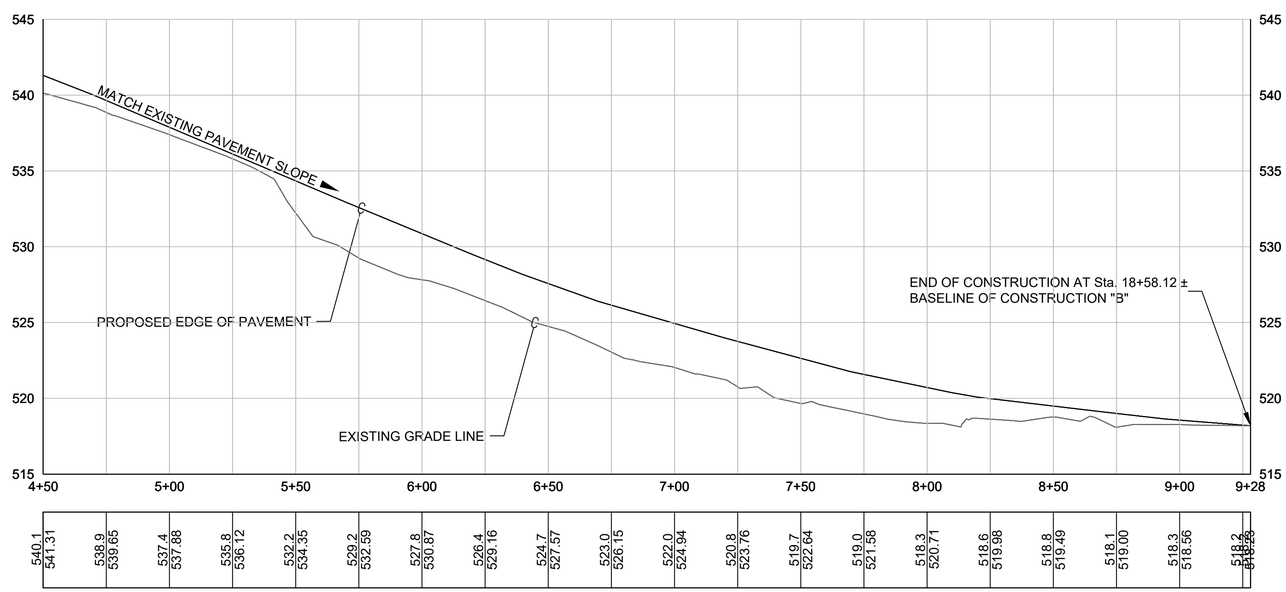

STOTLER ROAD - EAST SIDE
EDGE OF PAVEMENT PROFILE "E"

NO.	REVISION DESCRIPTION	BY	DATE

DESIGNED BY: PJM
DRAWN BY: GLJ
CHECKED BY: PJM
DATE: 09-15-22

WASHINGTON COUNTY, MARYLAND
DIVISION OF ENGINEERING

Washington County Administrative Annex, Building
747 Northern Avenue, Hagerstown, Maryland, 21742
Phone: 240-313-2460 Fax: 240-313-2401

INTERSECTION SIGNAL&
SIDEWALK IMPROVEMENTS
STOTLER RD. & HALFWAY BLVD.
STOTLER ROAD - PROFILE - E

STATE OF MARYLAND
PAMELA JEAN HORN
No. 39257
PROFESSIONAL ENGINEER
10.7.22

SCALE
1" = 30' H / 1" = 5' V

SECTION NO.
PR - 03

SHEET NO.
10 OF 48

PROJECT NO.
16-045

K:\CADD\28-281 STOTLER ROAD ADA SIDEWALK\CONSTRUCTION\4 PP - ROADWAY PLAN & PROFILE\28-281 PP.DWG Last Saved: 10/5/2022 12:50 PM

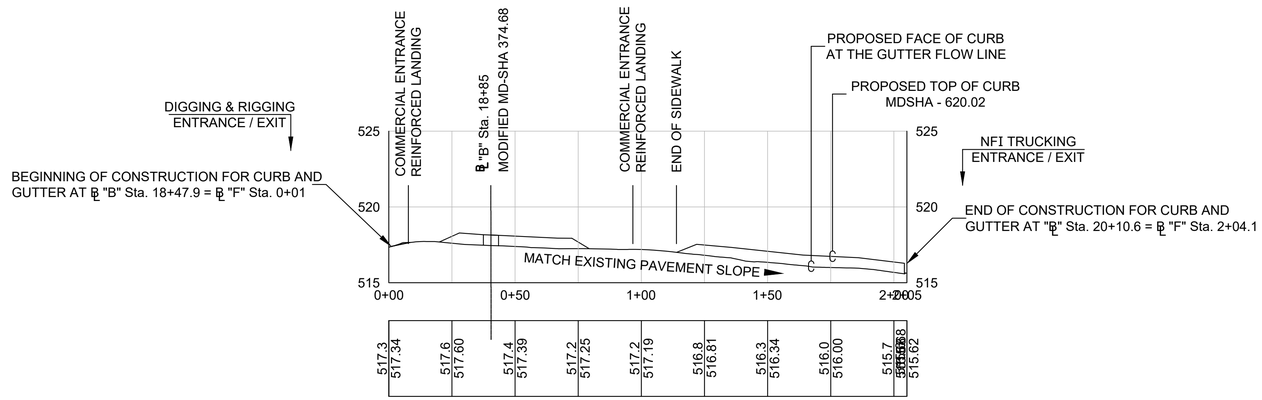

STOTLER ROAD - WEST SIDE
FACE OF CURB PROFILE "F"

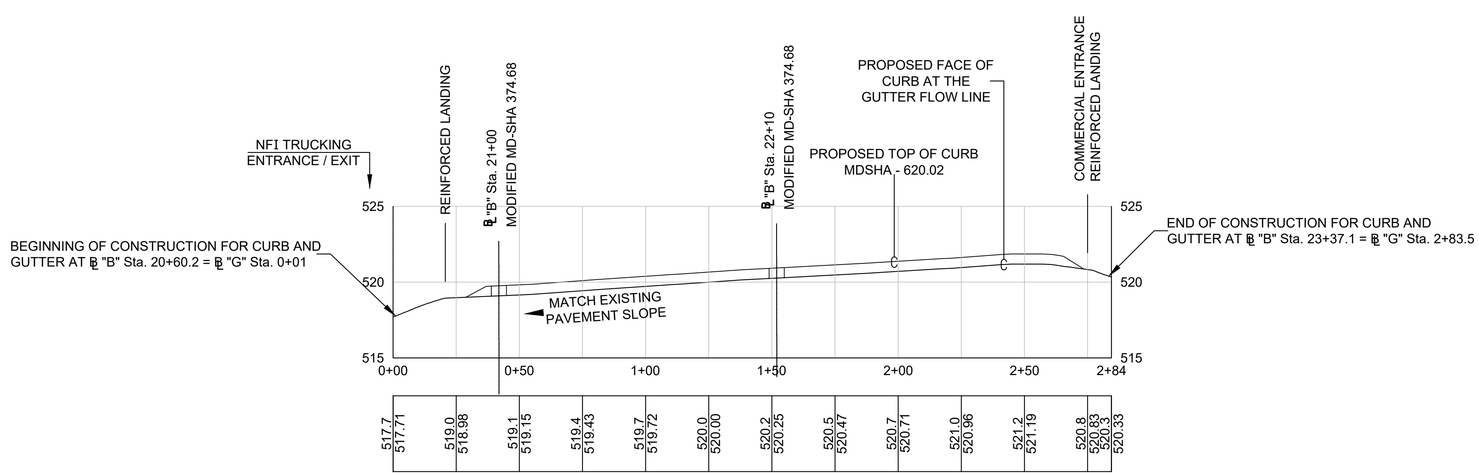

STOTLER ROAD - WEST SIDE
FACE OF CURB PROFILE "G"

K:\CADD\28-281 STOTLER ROAD ADA SIDEWALK\CONSTRUCTION\4 PP - ROADWAY PLAN & PROFILE\28-281 PP.DWG Last Saved: 10/5/2022 12:50 PM

NO.	REVISION DESCRIPTION	BY	DATE

DESIGNED BY: PJM
DRAWN BY: GLJ
CHECKED BY: PJM
DATE: 09-15-22

WASHINGTON COUNTY, MARYLAND
DIVISION OF ENGINEERING

Washington County Administrative Annex Building
747 Northern Avenue, Hagerstown, Maryland, 21742
Phone: 240-313-2460 Fax: 240-313-2401

INTERSECTION SIGNAL & SIDEWALK IMPROVEMENTS
STOTLER RD. & HALFWAY BLVD.
STOTLER ROAD - PROFILE - F AND G

STATE OF MARYLAND
PAMELA JEAN HOHN
No. 39251
PROFESSIONAL ENGINEER
10.7.22

SCALE
1" = 30' H / 1" = 5' V

SECTION NO.
PR - 04

SHEET NO.
11 OF 48

PROJECT NO.
16-045

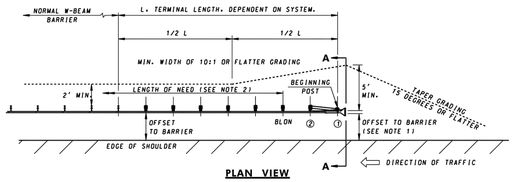

PLAN VIEW

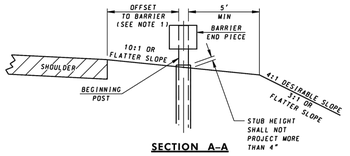

SECTION A–A

NOTES

1. WHEN THE TRAFFIC BARRIER POST IS PLACED LESS THAN 4' FROM THE EDGE OF SHOULDER/PAVEMENT, THE END TREATMENT SHALL BE FLARED AT A RATE OF 25:1 OVER THE FULL LENGTH AND ON A STRAIGHT LINE.
2. AN EFFECTIVE LON OF 34' SHALL BE INCLUDED IN THE END TREATMENT PAYMENT.
3. SYSTEM MUST BE INSTALLED AT A HEIGHT OF 31".
4. FOR DELINEATION, SEE STANDARD NO. 605.14.
5. THIS SCHEMATIC DRAWING IS FOR ILLUSTRATIVE PURPOSES ONLY. SEE MDOT SHA QPL FOR APPROVED SYSTEMS THAT ARE 2016 MASH COMPLIANT.

SPECIFICATION 606	CATEGORY CODE ITEMS
APPROVED	DIRECTOR - OFFICE OF HIGHWAY DEVELOPMENT

APPROVAL SHA REVISIONS		APPROVAL FEDERAL HIGHWAY ADMINISTRATION	
APPROVAL	11-10-99	APPROVAL	7-2-99
REVISED	1-10-17	REVISED	12-1-16
REVISED	9-20-19	REVISED	8-15-19
REVISED	3-16-22	REVISED	2-24-22

MARYLAND DEPARTMENT OF TRANSPORTATION
STATE HIGHWAY ADMINISTRATION

STANDARDS FOR HIGHWAYS AND INCIDENTAL STRUCTURES

TRAFFIC BARRIER W-BEAM ONE-SIDED END TREATMENT (TYPE C)

STANDARD NO. MD 605.03

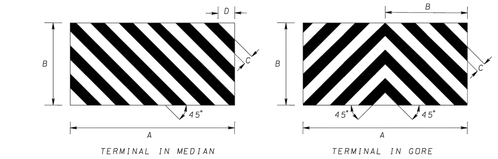

TERMINAL IN MEDIAN — TERMINAL IN GORE

SIGN SIZE	DIMENSIONS (INCHES)			
	A	B	C	D
STD	BASED ON PRODUCT		3	4-1/4

TWO SIDED END TREATMENTS

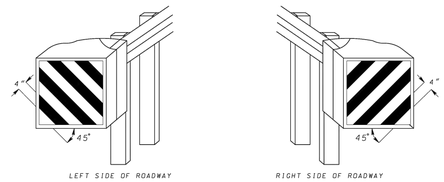

LEFT SIDE OF ROADWAY — RIGHT SIDE OF ROADWAY

ONE SIDED END TREATMENTS

NOTES

1. DELINEATION MUST MEET THE REQUIREMENTS IN MUTCD SECTIONS 2C.64 AND 2C.65.
2. DELINEATION SHALL BE TYPE IX OR XI REFLECTIVE SHEETING WITH BLACK STRIPES ON FLUORESCENT YELLOW.
3. WHEN PLACING SHEETING ON BARE METAL, METAL SHOULD BE CLEANED AS PER MANUFACTURER'S RECOMMENDATIONS PRIOR TO APPLICATION OF SHEETING.
4. SHEETING SHOULD EXTEND TO TOP AND BOTTOM AND FULL WIDTH OF TERMINAL. SIZE MAY BE ADJUSTED AS NECESSARY TO FIT DIFFERENT MANUFACTURER'S TERMINALS.
5. DELINEATION WILL BE INCIDENTAL TO THE APPROPRIATE TRAFFIC BARRIER END TREATMENT.

SPECIFICATION 606	CATEGORY CODE ITEMS
APPROVED	DIRECTOR - OFFICE OF HIGHWAY DEVELOPMENT

APPROVAL SHA REVISIONS		APPROVAL FEDERAL HIGHWAY ADMINISTRATION	
APPROVAL	9-20-19	APPROVAL	8-15-19
REVISED		REVISED	
REVISED		REVISED	
REVISED		REVISED	

MARYLAND DEPARTMENT OF TRANSPORTATION
STATE HIGHWAY ADMINISTRATION

STANDARDS FOR HIGHWAYS AND INCIDENTAL STRUCTURES

TRAFFIC BARRIER END TREATMENT AND CRASH CUSHION DELINEATION

STANDARD NO. MD 605.14

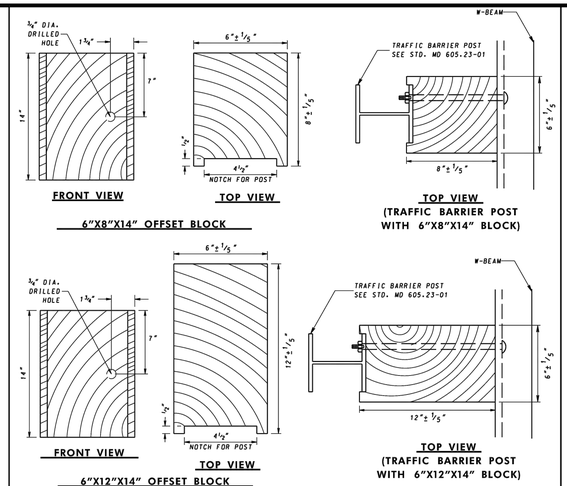

NOTES

1. WOOD OFFSET BLOCKS 6"x8"x14" TO BE USED UNLESS OTHERWISE SPECIFIED OR DIRECTED BY THE ENGINEER.
2. FOR BOLT AND BOLT NUT DETAILS, SEE STD. MD 605.23.
3. USE COMPOSITE OFFSET BLOCKS

SPECIFICATION 605	CATEGORY CODE ITEMS
APPROVED	DIRECTOR - OFFICE OF HIGHWAY DEVELOPMENT

APPROVAL SHA REVISIONS		APPROVAL FEDERAL HIGHWAY ADMINISTRATION	
APPROVAL	11-10-99	APPROVAL	7-2-99
REVISED	1-9-20	REVISED	12-23-19
REVISED	2-25-20	REVISED	2-24-20
REVISED	3-16-22	REVISED	2-24-22

MARYLAND DEPARTMENT OF TRANSPORTATION
STATE HIGHWAY ADMINISTRATION

STANDARDS FOR HIGHWAYS AND INCIDENTAL STRUCTURES

OFFSET BLOCK

STANDARD NO. MD 605.21

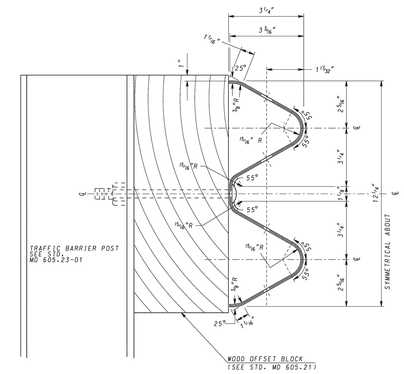

SIDE VIEW
(MATERIAL: 12 GA. STEEL)

NOTES

1. W-BEAM RAIL IS FURNISHED SHOP CURVED, CONCAVE OR CONVEX TO RADII BETWEEN 20-150'.
2. W-BEAM RAIL SECTIONS SHALL BE 12'-6" OR 25'-0" LENGTHS UNLESS SPECIFIED OTHERWISE.

SPECIFICATION 605	CATEGORY CODE ITEMS
APPROVED	DIRECTOR - OFFICE OF HIGHWAY DEVELOPMENT

APPROVAL SHA REVISIONS		APPROVAL FEDERAL HIGHWAY ADMINISTRATION	
APPROVAL	3-24-69	APPROVAL	3-4-69
REVISED	4-17-06	REVISED	4-5-06
REVISED	1-9-20	REVISED	12-23-19
REVISED		REVISED	

MARYLAND DEPARTMENT OF TRANSPORTATION
STATE HIGHWAY ADMINISTRATION

STANDARDS FOR HIGHWAYS AND INCIDENTAL STRUCTURES

TRAFFIC BARRIER W-BEAM SINGLE FACE

STANDARD NO. MD 605.22

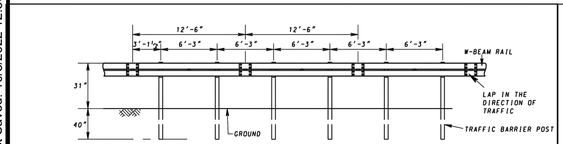

ELEVATION VIEW

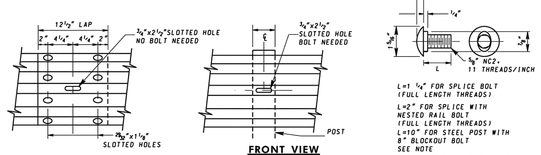

FRONT VIEW
SPLICE
(BOLTS NOT SHOWN)

FRONT VIEW
POST WITH W-BEAM RAIL
(BOLT NOT SHOWN)

BOLT

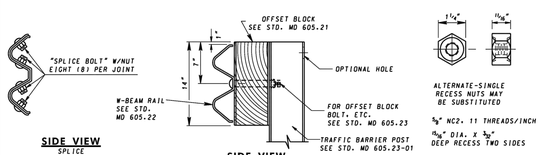

SIDE VIEW
SPLICE

SIDE VIEW
POST WITH W-BEAM RAIL

NUT

NOTES

1. FOR COMPOSITE OFFSET BLOCKS SEE NOTE 3 ON STD. MD 605.21.
2. THE CONTRACTOR HAS THE OPTION TO USE SHORTER BOLTS WITH A MINIMUM OF 1/2" PROTRUSION BEYOND NUT.
3. WITH ENGINEER'S APPROVAL, ONE POST CAN BE OMITTED WITHOUT OTHER CHANGES. A MINIMUM OF EIGHT POSTS MUST BE INSTALLED BETWEEN OMITTED POSTS.

SPECIFICATION 605	CATEGORY CODE ITEMS
APPROVED	DIRECTOR - OFFICE OF HIGHWAY DEVELOPMENT

APPROVAL SHA REVISIONS		APPROVAL FEDERAL HIGHWAY ADMINISTRATION	
APPROVAL	5-6-74	APPROVAL	9-30-76
REVISED	1-9-20	REVISED	12-23-19
REVISED	2-25-20	REVISED	2-24-20
REVISED	3-16-22	REVISED	2-24-22

MARYLAND DEPARTMENT OF TRANSPORTATION
STATE HIGHWAY ADMINISTRATION

STANDARDS FOR HIGHWAYS AND INCIDENTAL STRUCTURES

TRAFFIC BARRIER W-BEAM, W-BEAM SPLICES AND OFFSET BLOCK

STANDARD NO. MD 605.23

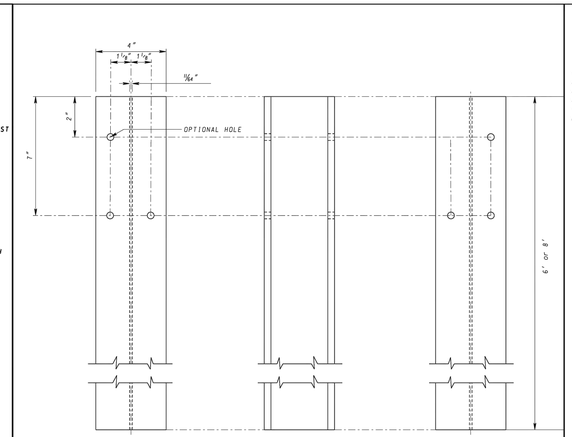

TOP VIEW

NOTES

1. 8' POST SHALL BE USED ONLY WHEN SPECIFIED.
2. W6X9 POSTS ARE OPTIONAL SUBSTITUTE FOR W6X8.5 POST.

WELDED W6x8.5 STEEL POST

SPECIFICATION 605	CATEGORY CODE ITEMS
APPROVED	DIRECTOR - OFFICE OF HIGHWAY DEVELOPMENT

APPROVAL SHA REVISIONS		APPROVAL FEDERAL HIGHWAY ADMINISTRATION	
APPROVAL	11-10-99	APPROVAL	7-2-99
REVISED	10-1-01	REVISED	
REVISED	1-9-20	REVISED	12-23-19
REVISED		REVISED	

MARYLAND DEPARTMENT OF TRANSPORTATION
STATE HIGHWAY ADMINISTRATION

STANDARDS FOR HIGHWAYS AND INCIDENTAL STRUCTURES

TRAFFIC BARRIER W-BEAM METAL POST

STANDARD NO. MD 605.23-01

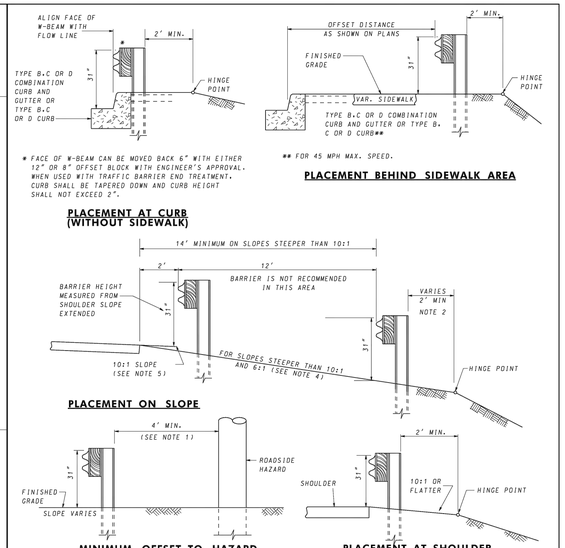

NOTES

1. THE MINIMUM OFFSET DIMENSION SHOWN CAN BE REDUCED BY STIFFENING THE TRAFFIC BARRIER SYSTEM. SEE STD MD 605.31-01.
2. 8'-0" LONG POSTS ARE TO BE USED WHEN THE DISTANCE FROM THE BACK OF THE W BEAM POST TO THE HINGE POINT IS LESS THAN 2' AND THE SLOPE BEYOND THE HINGE IS STEEPER THAN 4:1.
3. WHEN THE FACE OF THE TRAFFIC BARRIER IS MORE THAN 2' FROM THE SHOULDER EDGE, THE HEIGHT MEASURED FROM THE EXISTING GROUND SHALL BE 31".
4. WHEN SLOPE IS STEEPER THAN 6:1, THE FACE OF THE BARRIER MUST BE ALIGNED WITH THE EDGE OF SHOULDER.
5. SLOPE IN FRONT OF BARRIER INSTALLED 2' OFFSET FROM SHOULDER EDGE MUST BE 10:1 OR SHALLOWER.

SPECIFICATION 605	CATEGORY CODE ITEMS
APPROVED	DIRECTOR - OFFICE OF HIGHWAY DEVELOPMENT

APPROVAL SHA REVISIONS		APPROVAL FEDERAL HIGHWAY ADMINISTRATION	
APPROVAL	6-4-84	APPROVAL	8-1-94
REVISED	12-21-17	REVISED	12-20-17
REVISED	6-22-18	REVISED	4-30-18
REVISED	1-9-20	REVISED	12-23-19

MARYLAND DEPARTMENT OF TRANSPORTATION
STATE HIGHWAY ADMINISTRATION

STANDARDS FOR HIGHWAYS AND INCIDENTAL STRUCTURES

TRAFFIC BARRIER W-BEAM PLACEMENT DETAILS

STANDARD NO. MD 605.31

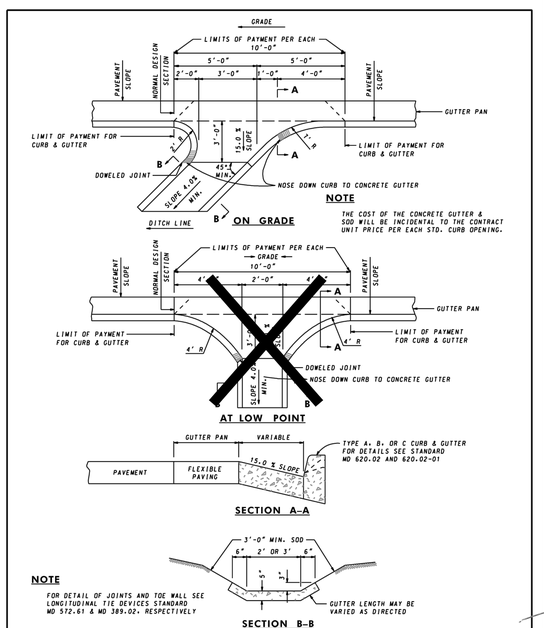

NOTE

FOR DETAIL OF JOINTS AND TOE WALL SEE LONGITUDINAL TIE DEVICES STANDARD MD 572.61 & MD 389.02, RESPECTIVELY

SPECIFICATION 602	CATEGORY CODE ITEMS
APPROVED	DIRECTOR - OFFICE OF HIGHWAY DEVELOPMENT

APPROVAL + SHA REVISIONS		APPROVAL + FEDERAL HIGHWAY ADMINISTRATION	
APPROVAL	2-15-62	APPROVAL	
REVISED	10-1-01	REVISED	8-1-84
REVISED		REVISED	
REVISED		REVISED	

Maryland Department of Transportation
STATE HIGHWAY ADMINISTRATION
STANDARDS FOR HIGHWAYS AND INCIDENTAL STRUCTURES

STANDARD CURB OPENING DETAILS FOR COMBINATION CURB & GUTTER

STANDARD NO. MD 640.02

NO.	REVISION DESCRIPTION	BY	DATE

DESIGNED BY: PJM
DRAWN BY: GLJ
CHECKED BY: PJM / SH
DATE: 09-15-22

WASHINGTON COUNTY, MARYLAND
DIVISION OF ENGINEERING

Washington County Administrative Annex Building
747 Northern Avenue, Hagerstown, Maryland, 21742
Phone: 240-313-2460 Fax: 240-313-2401

INTERSECTION SIGNAL & SIDEWALK IMPROVEMENTS
STOTLER RD. & HALFWAY BLVD.
DETAILS

STATE OF MARYLAND PAMELA JEAN HOHN No. 39251 PROFESSIONAL ENGINEER
10.7.22

SCALE: NONE
SECTION NO.: DE -01
SHEET NO.: 12 OF 48
PROJECT NO.: 16-045

K:\CADD\28-281 STOTLER ROAD ADA SIDEWALK\CONSTRUCTION\5 DE - DETAILS\28-281 DE.DWG Last Saved: 10/5/2022 12:56 PM

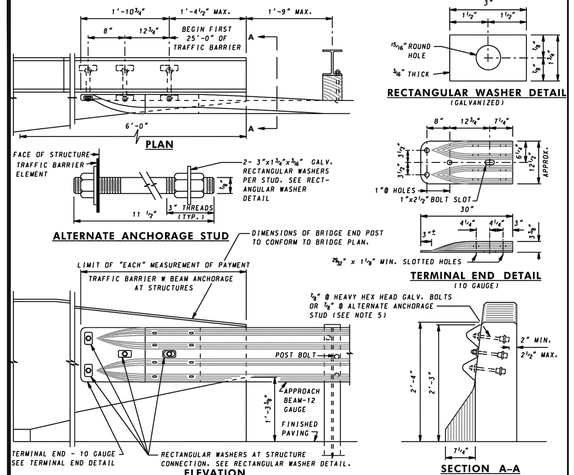

NOTES

1. APPROACH END: FIRST 25'-0" OF TRAFFIC BARRIER AFFIXED TO BRIDGE STRUCTURE SHALL HAVE THE FIRST POST PLACED AT A MAXIMUM OF 1'-9" FROM THE BRIDGE AND THE NEXT SEVEN POSTS SPACED AT 3'-1½" C/C. WHERE NECESSARY, AN ADDITIONAL OFFSET BRACKET MAY BE INSTALLED AT THE FOURTH AND FIFTH POSTS FROM THE BRIDGE TO AVOID CONFLICT WITH THE DRAINAGE INLETS. THIS TYPE OF "ANCHORAGE AT STRUCTURES" SHALL BE APPLIED TO ALL FOUR CORNERS OF THE BRIDGE STRUCTURE WHEREVER THERE IS TWO-WAY TRAFFIC, UNDIVIDED SECTION, OR NARROW DIVIDED SECTION WHEREBY AN ERRANT VEHICLE MAY REACH THE OPPOSITE CORNER OF THE BRIDGE STRUCTURE. WHEREVER THERE IS A BARRIER-DIVIDED SECTION OR WIDE DIVIDED SECTION WHEREBY AN ERRANT VEHICLE COULD NOT REACH THE OPPOSITE CORNER OF THE BRIDGE STRUCTURE, THIS TYPE OF "ANCHORAGE AT STRUCTURES" SHALL BE APPLIED ONLY AT THE APPROACH END WITH THE TRAILING ENDS TO BE TREATED AS DESIGNATED IN THE FOLLOWING NOTE.
2. TRAILING END: USE NORMAL POST SPACING. WHERE NECESSARY AN ADDITIONAL OFFSET BRACKET MAY BE INSTALLED AT THE SECOND POST TO AVOID CONFLICT WITH DRAINAGE INLETS.
3. ADDITIONAL OFFSET BRACKETS SHALL NOT EXCEED A MAXIMUM OF TWO PER POST IN ALL CASES.
4. COST OF ADDITIONAL POSTS AND OFFSET BRACKETS TO BE INCLUDED IN BID PRICE PER LINEAR FOOT OF TRAFFIC BARRIER WITH BEAM.
5. THE CONTRACTOR SHALL FURNISH AND INSTALL FOUR (4) 5/8" Ø HEAVY HEX. HEAD GALV. BOLTS WITH GALV. HEX. HEAD NUT AND GALV. RECTANGULAR WASHER CAST IN BRIDGE END POST. ATTACH W BEAM WITH GALV. RECTANGULAR WASHER AND HEX. NUT OR AS ALTERNATE THE CONTRACTOR SHALL FURNISH AND INSTALL FOUR (4) GALV. THREADED STUDS WITH GALV. RECTANGULAR WASHER AND TWO (2) GALV. HEX. NUTS CAST IN BRIDGE END POST. ATTACH W BEAM WITH GALV. RECTANGULAR WASHER AND GALV. HEX. NUT AS SHOWN IN ALTERNATE ANCHORAGE STUD DETAIL. STEEL SHALL CONFIRM TO ASTM-A307 AND IS HOT DIPPED GALV. TO ASTM-A123 AFTER FABRICATION.

SPECIFICATION	CATEGORY CODE ITEMS
605	661380

APPROVED — DIRECTOR - OFFICE OF HIGHWAY DEVELOPMENT

APPROVAL • SHA REVISIONS		APPROVAL • FEDERAL HIGHWAY ADMINISTRATION	
APPROVAL		APPROVAL	4-26-83
REVISED	10-1-01	REVISED	4-16-97
REVISED		REVISED	
REVISED		REVISED	

Maryland Department of Transportation
STATE HIGHWAY ADMINISTRATION
STANDARDS FOR HIGHWAYS AND INCIDENTAL STRUCTURES
TRAFFIC BARRIER W BEAM ANCHORAGE AT STRUCTURES
STANDARD NO. MD 660.41

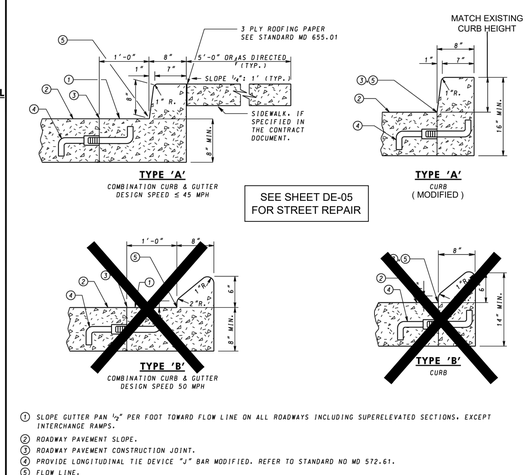

1. SLOPE GUTTER PAN ½" PER FOOT TOWARD FLOW LINE ON ALL ROADWAYS INCLUDING SUPERELEVATED SECTIONS, EXCEPT INTERCHANGE RAMPS.
2. ROADWAY PAVEMENT SLOPE.
3. ROADWAY PAVEMENT CONSTRUCTION JOINT.
4. PROVIDE LONGITUDINAL TIE DEVICE "J" BAR MODIFIED. REFER TO STANDARD NO MD 572.61.
5. FLOW LINE.

NOTES

A. RIGID PAVEMENT ROADWAY ADJACENT TO COMBINATION CURB AND GUTTER AND CLOSED SECTION ROADWAY USING RIGID PAVEMENT WITH COMBINATION CURB AND GUTTER SHALL BE TIED AT THE ROADWAY PAVEMENT CONSTRUCTION JOINT. REFER TO STANDARD MD 572.61 FOR METHOD OF LONGITUDINAL TIE DEVICES. SPACING OF THE TIE BARS SHALL BE IN ACCORDANCE WITH THE SPECIFICATIONS. RIGID PAVEMENT AND CURB SHALL BE CONSTRUCTED AS INDICATED. TIE DEVICES ARE NOT REQUIRED WHEN USING FLEXIBLE PAVEMENT FOR ROADWAY.
B. MAXIMUM JOINT SPACING FOR CONCRETE CURB AND COMBINATION CURB & GUTTER IS 10'. SEE SPECIFICATION FOR LOCATIONS AND DESCRIPTION OF TREATMENT FOR THE TYPES OF JOINTS USED.
C. TYPE A OR B COMBINATION CURB AND GUTTER SHALL BE USED FOR ALL APPLICABLE NEW CONSTRUCTION AND IN THOSE AREAS WHERE THE COMBINATION CURB AND GUTTER IS TO BE REPLACED IN KIND.
D. TYPE A OR B CURB SHALL BE USED FOR THE REPLACEMENT OF LIKE KIND OF CURB ONLY. NOT TO BE USED FOR NEW CONSTRUCTION EXCEPT WHERE INDICATED ON APPROPRIATE INLET STANDARDS.

SPECIFICATION	CATEGORY CODE ITEMS
602	

APPROVED — DIRECTOR - OFFICE OF HIGHWAY DEVELOPMENT

APPROVAL • SHA REVISIONS		APPROVAL • FEDERAL HIGHWAY ADMINISTRATION	
APPROVAL	2-10-04	APPROVAL	3-31-04
REVISED	2-23-16	REVISED	2-23-16
REVISED		REVISED	
REVISED		REVISED	

Maryland Department of Transportation
STATE HIGHWAY ADMINISTRATION
STANDARDS FOR HIGHWAYS AND INCIDENTAL STRUCTURES
STANDARD TYPES A & B CONCRETE CURB AND COMBINATION CONCRETE CURB & GUTTER
STANDARD NO. MD 620.02

1 OF 2

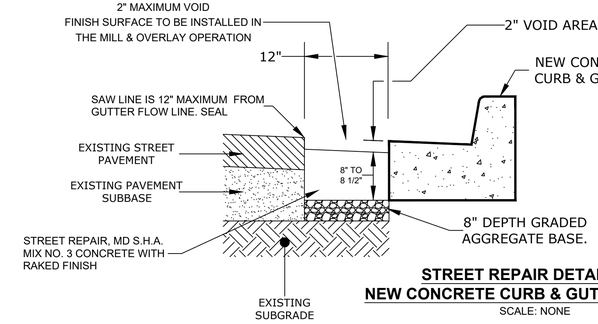

STREET REPAIR DETAIL FOR NEW CONCRETE CURB & GUTTER & CURB

SCALE: NONE

NOTES:

1. SAW CUT THE EXISTING STREET PAVEMENT IN NEAT STRAIGHT LINES AT 12" MAXIMUM FROM THE FACE OF THE CURB.
2. THE CONCRETE STREET REPAIR SHALL BE PLACED ONLY AFTER THE CONCRETE CURB AND GUTTER HAS BEEN PLACED AND HAS CURED, (IN NO CASE SHALL THE TWO BE PLACED MONOLITHIC).
3. THE CONCRETE STREET REPAIR SHALL HAVE A RAKED SURFACE AND RECEIVE TACK COAT BEFORE THE PLACEMENT OF THE 1 1/2" TO 2" DEPTH BITUMINOUS CONCRETE STREET REPAIR.

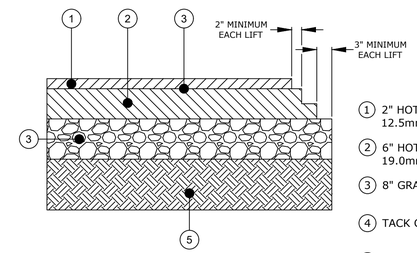

1. 2" HOT MIX ASPHALT SURFACE, 12.5mm PG 64H-22 (1-2" LIFT)
2. 6" HOT MIX ASPHALT BASE, 19.0mm PG 64S-22 (2-3" LIFTS)
3. 8" GRADED AGGREGATE BASE
4. TACK COAT AS REQUIRED
5. PREPARED SUBGRADE

FULL DEPTH PAVEMENT DETAIL

SCALE: NONE

NOTES:

1. ALL CONSTRUCTION MATERIALS SHALL BE IN ACCORDANCE WITH THE MDOT, SHA-STANDARD SPECIFICATIONS FOR CONSTRUCTION MATERIALS., JUNE 2020, AS FOLLOWS:
   a. SUBGRADE PREPARATION - SECTIONS 204.01 THRU 204.03.08 & 208.01 THRU 208.03.05
   b. GRADED AGGREGATE BASE COURSE - SECTIONS 501.01 THRU 501.03.13
   c. HOT MIX ASPHALT - SECTIONS 504.01 THRU 504.03.19
2. SHOULDER SECTIONS SHALL BE A CONTINUATION OF THE ROADWAY GRADE AND SECTION.
3. SUBGRADE/SHOULDER DRAINS SHALL BE INSTALLED WHERE DEEMED NECESSARY UPON FIELD INSPECTION.
4. DRAINS SHALL BE IN ACCORDANCE WITH SECTIONS 306.01 THRU 306.03.06.
5. SAW CUT EXISTING PAVEMENT EDGE IN A NEAT STRAIGHT / UNIFORM LINE. SEAL JOINT WITH A BITUMINOUS SEALER AFTER FINAL PAVEMENT INSTALLATION.

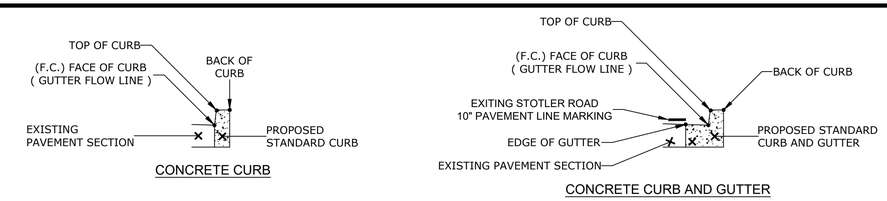

TYPICAL CONCRETE CURB & CURB AND GUTTER LEGEND

SCALE: NONE

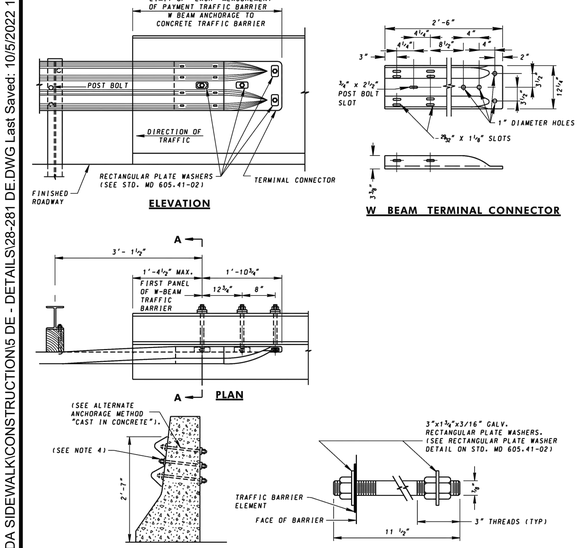

NOTES

1. THIS TYPE OF ANCHORAGE IS TO BE USED ONLY ON THE TRAILING ENDS OF A STRUCTURE ON A HIGHWAY WITH DIRECTIONAL ONE WAY TRAFFIC.
2. USE NORMAL POST SPACING. WHERE NECESSARY, AN ADDITIONAL OFFSET BLOCK MAY BE INSTALLED TO AVOID CONFLICT WITH DRAINAGE INLETS.
3. ADDITIONAL OFFSET BLOCKS SHALL NOT EXCEED A MAXIMUM OF TWO PER POST IN ALL CASES.
4. THE CONTRACTOR SHALL CORE FOUR (4) 1" DIA. HOLES THROUGH CONCRETE BARRIER. FURNISH AND INSTALL FOUR (4) 7/8" DIA. HEAVY DUTY GALVANIZED HEX BOLTS AND NUTS WITH FOUR (4) RECTANGULAR PLATE WASHERS.

SPECIFICATION	CATEGORY CODE ITEMS
605	

APPROVED — DIRECTOR - OFFICE OF HIGHWAY DEVELOPMENT

APPROVAL SHA REVISIONS		APPROVAL FEDERAL HIGHWAY ADMINISTRATION	
APPROVAL	6-4-84	APPROVAL	4-26-83
REVISED	8-16-12	REVISED	8-13-12
REVISED	3-16-22	REVISED	2-24-23
REVISED		REVISED	

MARYLAND DEPARTMENT OF TRANSPORTATION
STATE HIGHWAY ADMINISTRATION
STANDARDS FOR HIGHWAYS AND INCIDENTAL STRUCTURES
TRAFFIC BARRIER W-BEAM ANCHORAGE TO TRAIL END OF JERSEY SHAPE OR F SHAPE
STANDARD NO. MD 605.44

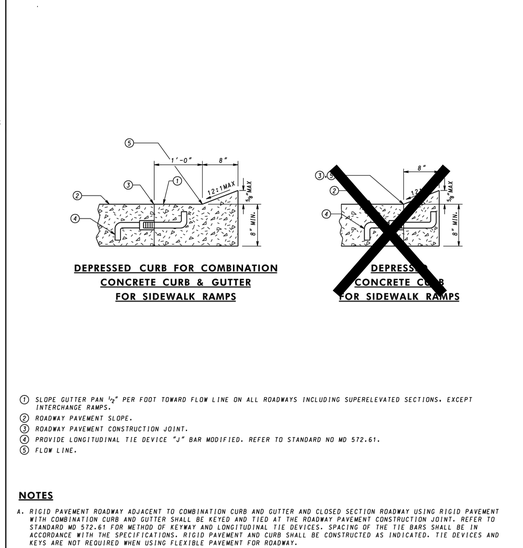

1. SLOPE GUTTER PAN ½" PER FOOT TOWARD FLOW LINE ON ALL ROADWAYS INCLUDING SUPERELEVATED SECTIONS, EXCEPT INTERCHANGE RAMPS.
2. ROADWAY PAVEMENT SLOPE.
3. ROADWAY PAVEMENT CONSTRUCTION JOINT.
4. PROVIDE LONGITUDINAL TIE DEVICE "J" BAR MODIFIED. REFER TO STANDARD NO MD 572.61.
5. FLOW LINE.

NOTES

A. RIGID PAVEMENT ROADWAY ADJACENT TO COMBINATION CURB AND GUTTER AND CLOSED SECTION ROADWAY USING RIGID PAVEMENT WITH COMBINATION CURB AND GUTTER SHALL BE KEYED AND TIED AT THE ROADWAY PAVEMENT CONSTRUCTION JOINT. REFER TO STANDARD MD 572.61 FOR METHOD OF KEYWAY AND LONGITUDINAL TIE DEVICES. SPACING OF THE TIE BARS SHALL BE IN ACCORDANCE WITH THE SPECIFICATIONS. RIGID PAVEMENT AND CURB SHALL BE CONSTRUCTED AS INDICATED. TIE DEVICES AND KEYS ARE NOT REQUIRED WHEN USING FLEXIBLE PAVEMENT FOR ROADWAY.
B. MAXIMUM JOINT SPACING FOR CONCRETE CURB AND COMBINATION CURB & GUTTER IS 10'. SEE SPECIFICATION FOR LOCATIONS AND DESCRIPTION OF TREATMENT FOR THE TYPES OF JOINTS USED.
C. PAYMENT FOR DEPRESSING THE CURB WILL BE INCIDENTAL TO THE CONTRACT UNIT PRICE BID PER LINEAR FOOT FOR THE ITEM CONCRETE CURB OR COMBINATION CONCRETE CURB AND GUTTER, AS SPECIFIED IN THE CONTRACT DOCUMENTS.

SPECIFICATION	CATEGORY CODE ITEMS
602	

APPROVED — DIRECTOR - OFFICE OF HIGHWAY DEVELOPMENT

APPROVAL • SHA REVISIONS		APPROVAL • FEDERAL HIGHWAY ADMINISTRATION	
APPROVAL	2-10-04	APPROVAL	3-31-04
REVISED	2-23-16	REVISED	2-23-16
REVISED		REVISED	
REVISED		REVISED	

Maryland Department of Transportation
STATE HIGHWAY ADMINISTRATION
STANDARDS FOR HIGHWAYS AND INCIDENTAL STRUCTURES
DEPRESSED CURB FOR COMBINATION CURB AND GUTTER AND DEPRESSED CURB FOR SIDEWALK RAMPS
STANDARD NO. MD 620.03

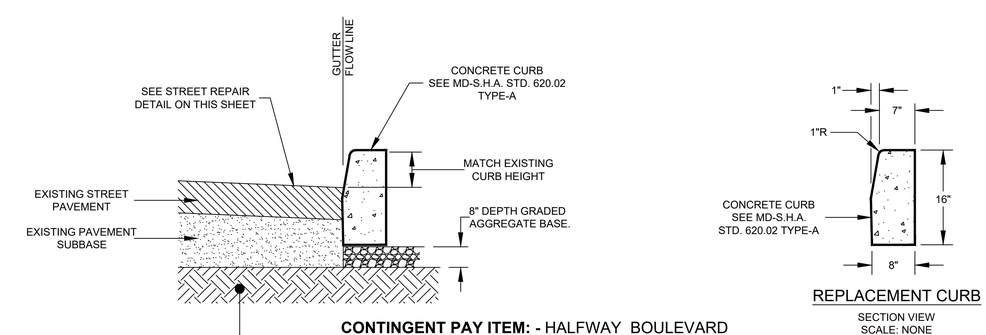

CONTINGENT PAY ITEM: - HALFWAY BOULEVARD
CURB REPLACEMENT INSTALLATION LOOKING EAST
STA. 107+80 ℄ "A" RT. TO STA. 113+27 ℄ "A" RT.
SCALE: NONE

NOTES:

1. REPLACEMENT CURB SHALL ONLY BE ALLOWED IF CURB EXISTS CURRENTLY (NOT CURB & GUTTER) AND THE EXISTING GUTTER FLOW LINE PERCENT SLOPE IS GREATER THAN 1.0%. CONTACT MISS UTILITY (1-800-257-7777) BEFORE PROCEEDING WITH DEMOLITION.
2. CONCRETE FOR REPLACEMENT CURB SHALL BE MD-S.H.A MIX 3 WITH A 28 DAY COMPRESSIVE STRENGTH OF 3,500 P.S.I., WITH 5%-8% AIR AND 2"-5"SLUMP. DO NOT ADD WATER TO THE SURFACE FOR FINISHING. ALL CONCRETE SHALL BE THOROUGHLY VIBRATED IN PLACE AND ALL EXPOSED SURFACES SHALL HAVE A BROOM FINISH. REPLACEMENT CURB SHALL RECEIVE 8" MINIMUM MD-S.H.A. NO. 57 STONE BEDDING. 1/2" EXPANSION JOINTS SHALL BE INSTALLED AT 40' MAX. INTERVALS, SAW CUT JOINTS AT 10' MAXIMUM INTERVALS (JOINTS IN SIDEWALK AND IN CURB TO MATCH WHERE POSSIBLE). SIDEWALK AND CURB SHALL NEVER BE PLACED MONOLITHIC. EXPANSION JOINTS MATERIALS WILL BE POSITION TO ALLOW FOR THE REQUIRED 1/2" DEPTH TWO PART ELASTOMERIC GUN-GRADE POLYSULFIDE SEALANT, SONNEBORN SONOLASTIC, OR AN APPROVED EQUAL. SAW CUT JOINTS WILL ALSO RECEIVE THIS SEALANT; BUT, AT A 3/8" DEPTH. COVER ALL SEALANT WITH FINE SAND TO REDUCE TRACKING.

NO.	REVISION DESCRIPTION	BY	DATE

DESIGNED BY: PJM
DRAWN BY: GLJ
CHECKED BY: PJM / SH
DATE: 09-15-22

WASHINGTON COUNTY, MARYLAND
DIVISION OF ENGINEERING

Washington County Administrative Annex, Building
747 Northern Avenue, Hagerstown, Maryland, 21742
Phone: 240-313-2460 Fax: 240-313-2401

INTERSECTION SIGNAL & SIDEWALK IMPROVEMENTS STOTLER RD. & HALFWAY BLVD. DETAILS

STATE OF MARYLAND — PAMELA JEAN HORN — No. 39257 — PROFESSIONAL ENGINEER — 10/5/22

SCALE: NONE
SECTION NO.: DE -02
SHEET NO.: 13 OF 48
PROJECT NO.: 16-045

K:\CADD\28-281 STOTLER ROAD ADA SIDEWALK\CONSTRUCTION\5 DE - DETAILS\28-281 DE.DWG Last Saved: 10/5/2022 12:56 PM

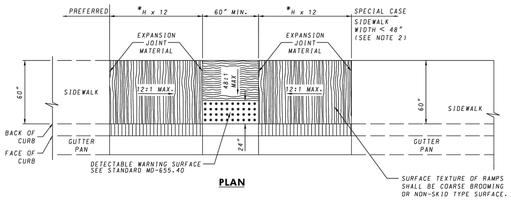

PLAN

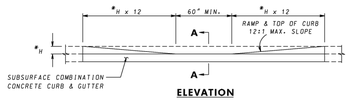

ELEVATION

* - H = HEIGHT OF CURB
ALL MEASUREMENTS IN INCHES

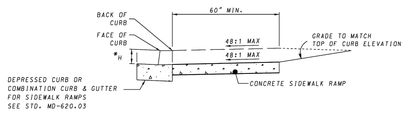

SECTION A - A

NOTES

1. TO BE USED WHERE SIDEWALK IS ADJACENT TO THE CURB. THIS STANDARD MAY BE MODIFIED TO SUIT A PARTICULAR LOCATION.
2. WHERE 60" SIDEWALK CAN NOT BE PROVIDED. A DESIGN WAIVER MUST BE REQUESTED.
3. NO TRAVERSABLE SLOPE ON THE RAMP OR SIDEWALK SHALL EXCEED 12:1 IN THE DIRECTION OF PEDESTRIAN TRAVEL, OR 48:1 PERPENDICULAR TO THE DIRECTION OF PEDESTRIAN TRAVEL. THE CROSS-SLOPE OF THE LANDING AREA CANNOT EXCEED GRADE OF ROADWAY
4. EXPANSION JOINT MATERIAL SHALL BE INSTALLED IN ACCORDANCE WITH STD. MD-655.01.
5. SIDEWALK RAMPS TO BE SHOWN ON PLANS SYMBOLICALLY AND REFERENCED WITH THE CENTER OF THE RAMP ALIGNED TO A STATION ON THE CONSTRUCTION CENTERLINE. SEPARATE DETAILS SHALL BE SHOWN WHERE PROPOSED RAMP VARIES FROM STANDARD CASES.
6. TRANSITION PANELS TO TIE INTO EXISTING SIDEWALK MUST BE A MINIMUM OF 5' IN LENGTH

SPECIFICATION	CATEGORY CODE ITEMS	Maryland Department of Transportation STATE HIGHWAY ADMINISTRATION STANDARDS FOR HIGHWAYS AND INCIDENTAL STRUCTURES
603 & 611		SIDEWALK RAMPS PARALLEL
APPROVED	DIRECTOR – OFFICE OF HIGHWAY DEVELOPMENT	
SHA State Highway Administration	APPROVAL • SHA REVISIONS / APPROVAL • FEDERAL HIGHWAY ADMINISTRATION	
	APPROVAL 2-10-04 / APPROVAL 3-31-04	
	REVISED 3-25-08 / REVISED 4-5-06	
	REVISED 6-2-14 / REVISED 5-20-14	
	REVISED / REVISED	
		STANDARD NO. MD 655.12

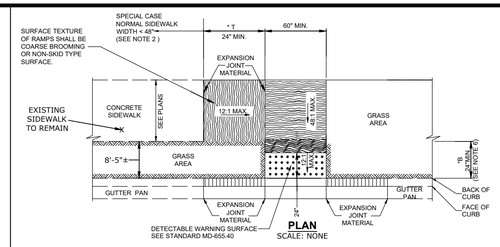

PLAN
SCALE: NONE

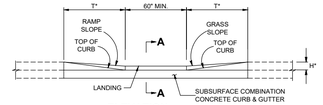

ELEVATION

* - H = HEIGHT OF CURB
B = BUFFER WIDTH (BACK OF CURB TO FRONT OF SIDEWALK)
T = TRANSITION LENGTH (LENGTH OF RAMP FROM SIDEWALK TO LANDING)
T = (12 x H) - B
ALL MEASUREMENTS IN INCHES

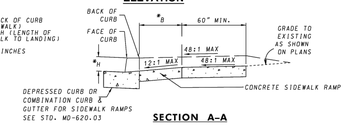

SECTION A-A

NOTES

1. TO BE USED WHERE AT LEAST 7'-0" EXISTS BETWEEN THE BACK OF CURB AND THE BACK OF SIDEWALK. THIS STANDARD MAY BE MODIFIED TO SUIT A PARTICULAR LOCATION.
2. WHERE 60" SIDEWALK CAN NOT BE PROVIDED. A DESIGN WAIVER MUST BE REQUESTED.
3. NO TRAVERSABLE SLOPE ON THE RAMP OR SIDEWALK SHALL EXCEED 12:1 IN THE DIRECTION OF PEDESTRIAN TRAVEL, OR 48:1 PERPENDICULAR TO THE DIRECTION OF PEDESTRIAN TRAVEL.
4. EXPANSION JOINT MATERIAL SHALL BE INSTALLED IN ACCORDANCE WITH STD. MD-655.01.
5. SIDEWALK RAMPS TO BE SHOWN ON PLANS SYMBOLICALLY AND REFERENCED WITH THE CENTER OF THE RAMP ALIGNED TO A STATION ON THE CONSTRUCTION CENTERLINE. SEPARATE DETAILS SHALL BE SHOWN WHERE PROPOSED RAMP VARIES FROM STANDARD CASES.
6. FOR BUFFER WIDTHS LESS THAN 24". WIDEN SIDEWALK TO BACK OF CURB AS SHOWN FOR THE SPECIAL CASE. THEN BUILD PARALLEL RAMP USING STANDARD MD-655.12.
7. TRANSITION PANELS TO TIE INTO EXISTING SIDEWALK MUST BE A MINIMUM OF 5' IN LENGTH
8. IF THE BUFFER AREA IS GREATER THAN OR EQUAL TO 4' THE LANDING AREA MUST BE 2% X 2%. IF THE BUFFER AREA IS LESS THAN 4' THE LANDING AREA CROSS-SLOPE CANNOT EXCEED THE GRADE OF THE ROAD.

SPECIFICATION	CATEGORY CODE ITEMS	Maryland Department of Transportation STATE HIGHWAY ADMINISTRATION STANDARDS FOR HIGHWAYS AND INCIDENTAL STRUCTURES
603 & 611		SIDEWALK RAMPS COMBINATION ✷
APPROVED	DIRECTOR – OFFICE OF HIGHWAY DEVELOPMENT	
SHA State Highway Administration	APPROVAL • SHA REVISIONS / APPROVAL • FEDERAL HIGHWAY ADMINISTRATION	
	APPROVAL 2-10-04 / APPROVAL 3-31-04	
	REVISED 8-25-08 / REVISED 4-5-06	
	REVISED 6-2-14 / REVISED 5-20-14	
	REVISED / REVISED	
		STANDARD NO. MD 655.13 MODIFIED

MAT DETAILS

SEE PLACEMENT GUIDELINES BELOW

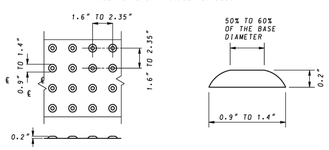

DOME SPACING **DOME SECTION**

PLACEMENT GUIDELINES

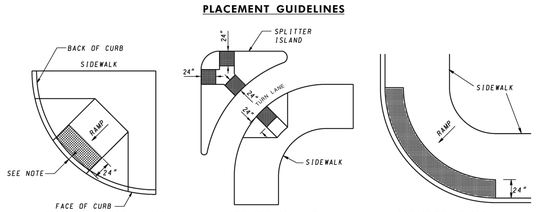

SHARED CURB RAMP **REFUGE ISLAND** **BLENDED CURB**

WHERE ISLANDS OR MEDIANS ARE LESS THAN 6 FEET WIDE, THE DETECTABLE WARNING SHOULD EXTEND ACROSS THE FULL LENGTH OF THE CUT THROUGH THE ISLAND OR MEDIAN

NOTES

1. THE DETECTABLE WARNING SURFACE SHALL BE LOCATED SO THAT THE EDGE NEAREST THE CURB LINE IS 6 TO 8 INCHES FROM THE FACE OF CURB.
2. FOR SKEWED APPLICATIONS DETECTABLE WARNING SHALL BE PLACED SUCH THAT THE DOMES CLOSEST TO THE BACK OF CURB ARE NO LESS THAN 0.5" AND NO MORE THAN 3.0" FROM THE BACK OF CURB. TRUNCATED DOME SURFACES SHALL BE FABRICATED TO PROVIDE FULL DOMES ONLY.
3. DETECTABLE WARNING SURFACE SHALL BE PAID FOR IN ACCORDANCE WITH SECTION 611 OF THE SPECIFICATIONS.
4. DETECTABLE WARNING SURFACES ARE REQUIRED AT STREET CROSSING & SIGNALIZED INTERSECTIONS.

SPECIFICATION	CATEGORY CODE ITEMS	Maryland Department of Transportation STATE HIGHWAY ADMINISTRATION STANDARDS FOR HIGHWAYS AND INCIDENTAL STRUCTURES
611		DETECTABLE WARNING SURFACES
APPROVED	DIRECTOR – OFFICE OF HIGHWAY DEVELOPMENT	
SHA State Highway Administration	APPROVAL • SHA REVISIONS / APPROVAL • FEDERAL HIGHWAY ADMINISTRATION	
	APPROVAL 2-10-04 / APPROVAL 3-31-04	
	REVISED 4-17-06 / REVISED 4-5-06	
	REVISED / REVISED	
	REVISED / REVISED	
		STANDARD NO. MD 655.40

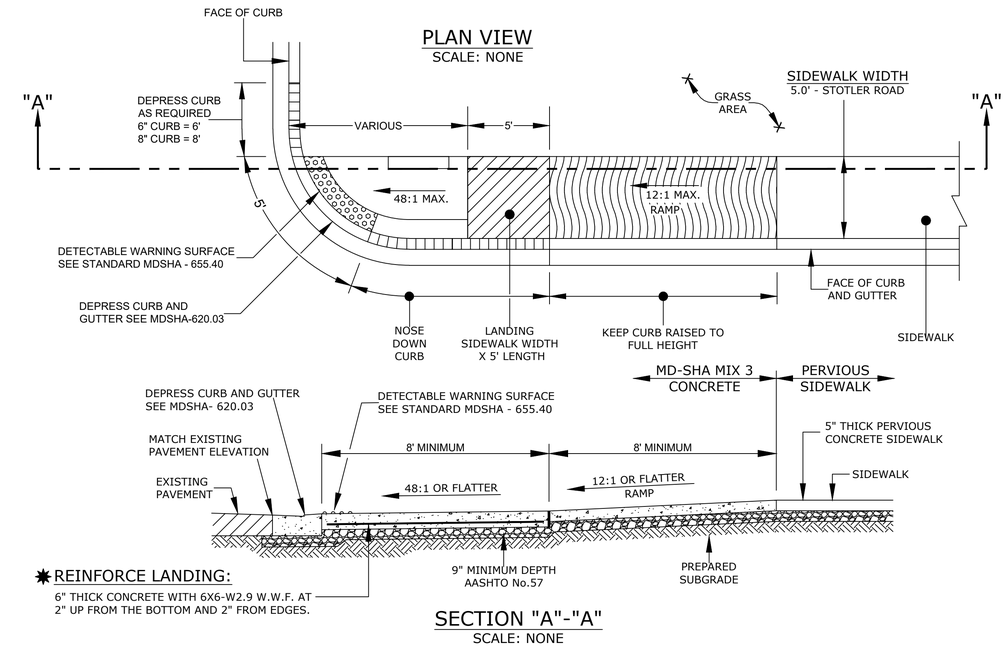

NOTES:

1. CONCRETE FOR SIDEWALK RAMPS SHALL BE MARYLAND S.H.A. MIX NO. 3 WITH A 28 DAY COMPRESSIVE STRENGTH OF 3,500 P.S.I. WITH 5%-8% AIR ENTRAINMENT.
2. ALL SIDEWALK SHALL BE CONSTRUCTED IN COMPLIANCE WITH THE "AMERICANS WITH DISABILITIES ACT" (A.D.A.) REQUIREMENTS. REFER TO SECTION 4.3 FOR INFORMATION CONCERNING "ACCESSIBLE ROUTE".
3. No. 57 STONE SHALL BE AGITATED, VIBRATED, OR OTHERWISE SETTLED IN PLACE. THE PRICE AND QUANTITY OF STONE BASE IS INCIDENTAL TO THE SIDEWALK.

TYPICAL
CONCRETE SIDEWALK RAMP
REINFORCE LANDING
SCALE: NONE

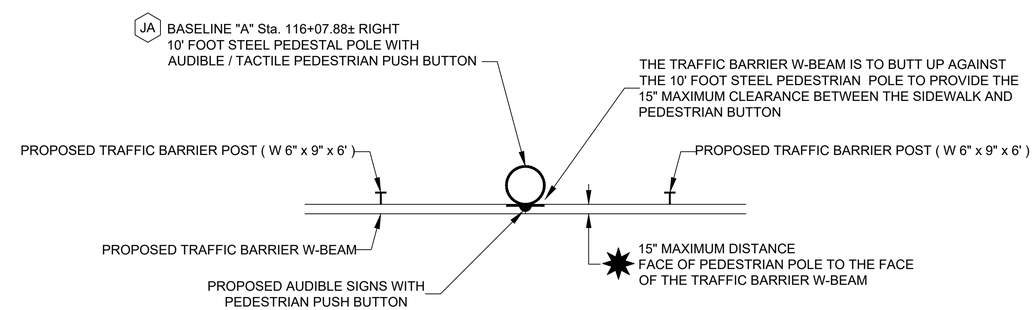

TRAFFIC BARRIER / PEDESTAL POLE DETAIL
BASELINE "A" Sta. 116+07.88± RIGHT
SCALE: NONE

NO.	REVISION DESCRIPTION	BY	DATE

DESIGNED BY: PJM
DRAWN BY: GLJ
CHECKED BY: PJM / SH
DATE: 09-15-22

WASHINGTON COUNTY, MARYLAND
DIVISION OF ENGINEERING

Washington County Administrative Annex, Building
747 Northern Avenue, Hagerstown, Maryland, 21742
Phone: 240-313-2460 Fax: 240-313-2401

INTERSECTION SIGNAL & SIDEWALK IMPROVEMENTS
STOTLER RD. & HALFWAY BLVD.
DETAILS

STATE OF MARYLAND PAMELA JEAN MOHN No. 39253 PROFESSIONAL ENGINEER
10.7.22

SCALE: NONE
SECTION NO.: DE -03
SHEET NO.: 14 OF 48
PROJECT NO.: 16-045

K:\CADD\28-281 STOTLER ROAD ADA SIDEWALK\CONSTRUCTION\5 DE - DETAILS\28-281 DE.DWG Last Saved: 10/5/2022 12:57 PM

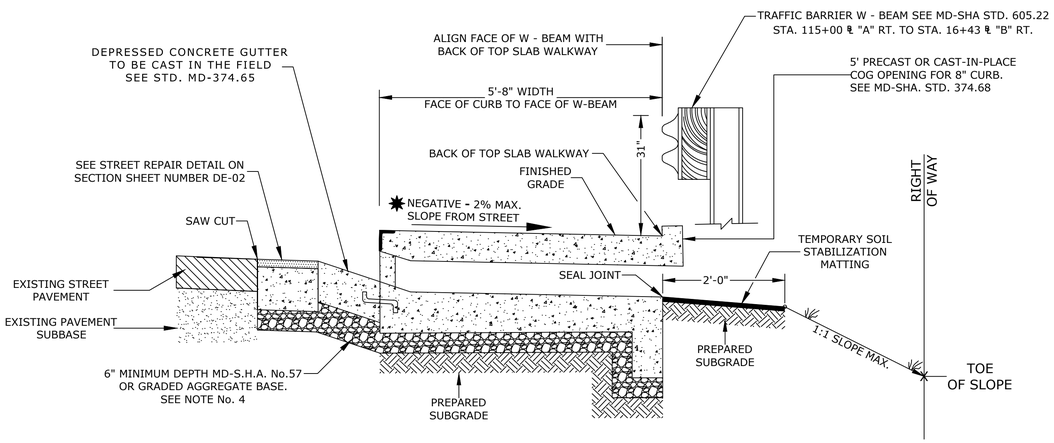

STOTLER ROAD
OPEN BACK INLET MD-SHA 374.68 (MODIFIED)
WITHOUT CONCRETE FLUME
Sta.'s 11+60, 13+70, 15+70, & 17+40, 18+85, & 22+10 ℄ "B"
SCALE: NONE

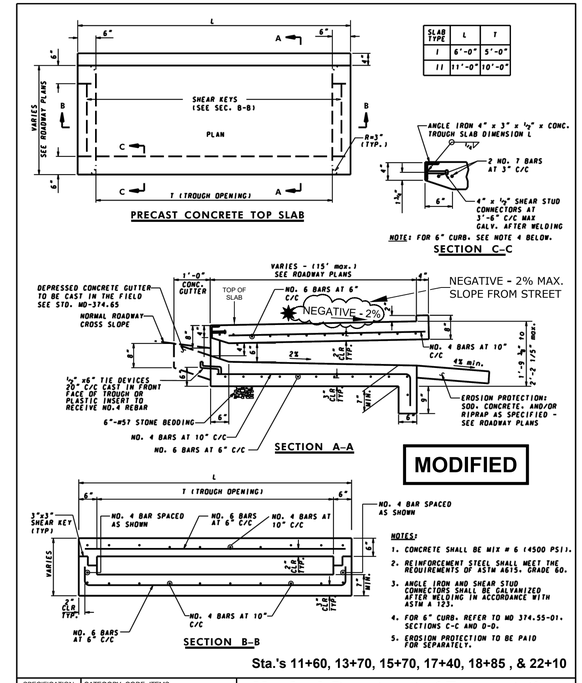

SLAB TYPE	L	T
I	6'-0"	5'-0"
II	11'-0"	10'-0"

SPECIFICATION 305	CATEGORY CODE ITEMS	Maryland Department of Transportation STATE HIGHWAY ADMINISTRATION STANDARDS FOR HIGHWAYS AND INCIDENTAL STRUCTURES PRECAST OR CAST-IN-PLACE COG /COS OPENING FOR 8" CURB 5' OR 10' ONLY
APPROVED	DIRECTOR - OFFICE OF HIGHWAY DEVELOPMENT	
SHA State Highway Administration	APPROVAL • SHA REVISIONS / APPROVAL • FEDERAL HIGHWAY ADMINISTRATION	
	APPROVAL 12-19-01 / APPROVAL 7-15-02	
	REVISED 1-9-08 / REVISED 11-26-07	
	REVISED / REVISED	
	REVISED / REVISED	STANDARD NO. MODIFIED MD 374.68

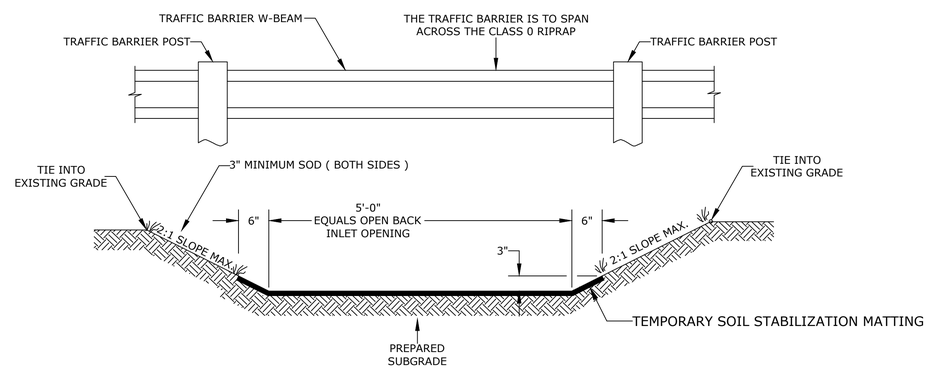

FRONT VIEW
OUTFALL
SCALE: NONE

NOTES:

1. SEE MD-SHA STD. 572.61 - CONCRETE PAVEMENT LONGITUDINAL TIE DEVICES.
2. SEE MD-SHA STD. 389.02 - 5" CONCRETE GUTTER FOR REINFORCEMENT BARS
3. THE COST OF THE CONCRETE AND SOD WILL BE INCIDENTAL TO THE CONTRACT UNIT PRICE PER EACH CURB OPEN BACK INLET OPENING.
4. EXCAVATED SUBGRADE SHALL BE UNDISTURBED EARTH, OR SHALL BE COMPACTED TO RECEIVE GRADED AGGREGATE BASE STONE BED. ALL THE GRADED AGGREGATE-BASE SHALL BE COMPACTED BY MECHANICAL MEANS TO A MINIMUM OF 92% OF THE MAXIMUM DRY DENSITY OF THE MODIFIED PROCTOR (ASTM D1557-78, OR AASHTO T-180) WITH AN IN PLACE MOISTURE CONTENT OF APPROXIMATELY ±2% OF THE OPTIMUM MOISTURE CONTENT.
5. THE CONCRETE CURB AND GUTTER PAN SLOPE SHALL BE 1/2" PER FOOT EXCEPT THROUGH SUPERELEVATED SECTIONS OR WHERE STREETS HAVE A FULL WIDTH CROSS SLOPE (NO CROWN). THEN THE GUTTER PAN ON THE HIGH SIDE OF THE STRRET SHALL SLOPE TO MATCH THE ADJACENT PAVEMENT. THE CURB AND GUTTER PAN SHALL BE PLACED MONOLITHIC.

NO.	REVISION DESCRIPTION	BY	DATE

DESIGNED BY: PJM
DRAWN BY: GLJ
CHECKED BY: PJM / SH
DATE: 09-15-22

WASHINGTON COUNTY, MARYLAND
DIVISION OF ENGINEERING

Washington County Administrative Annex, Building
747 Northern Avenue, Hagerstown, Maryland, 21742
Phone: 240-313-2460 Fax: 240-313-2401

INTERSECTION SIGNAL & SIDEWALK IMPROVEMENTS
STOTLER RD. & HALFWAY BLVD.
DETAILS

STATE OF MARYLAND
PAMELA JEAN HORN
No. 39253
PROFESSIONAL ENGINEER
10.7.22

SCALE
NONE
SECTION NO. DE -04
SHEET NO. 15 OF 48
PROJECT NO. 16-045

K:\CADD\28-281 STOTLER ROAD ADA SIDEWALK\CONSTRUCTION\5 DE - DETAILS\28-281 DE.DWG Last Saved: 10/5/2022 12:57 PM

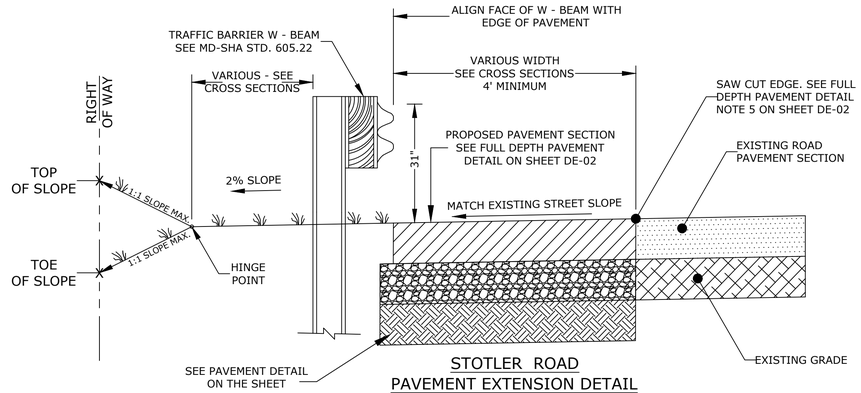

STOTLER ROAD
PAVEMENT EXTENSION DETAIL
WITHOUT CONCRETE CURB AND GUTTER
Sta. 12+85 ℄"B" LT. To Sta. ℄"B" LT. 14+75 AND
Sta. 18+00 ℄"B" LT. To Sta. ℄"B" LT. 18+50
SCALE: NONE

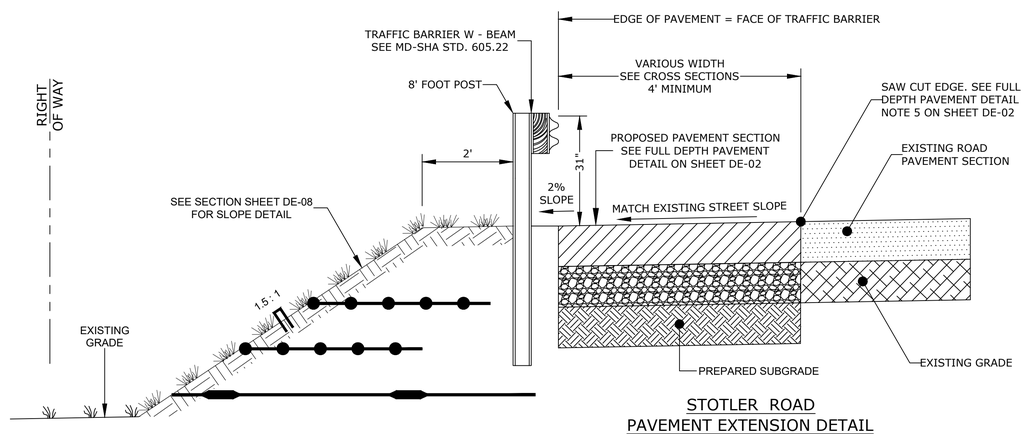

STOTLER ROAD
PAVEMENT EXTENSION DETAIL
WITHOUT CONCRETE CURB AND GUTTER
Sta. 14+75 ℄"B" LT. To Sta. 18+00 ℄"B" LT.
SCALE: NONE

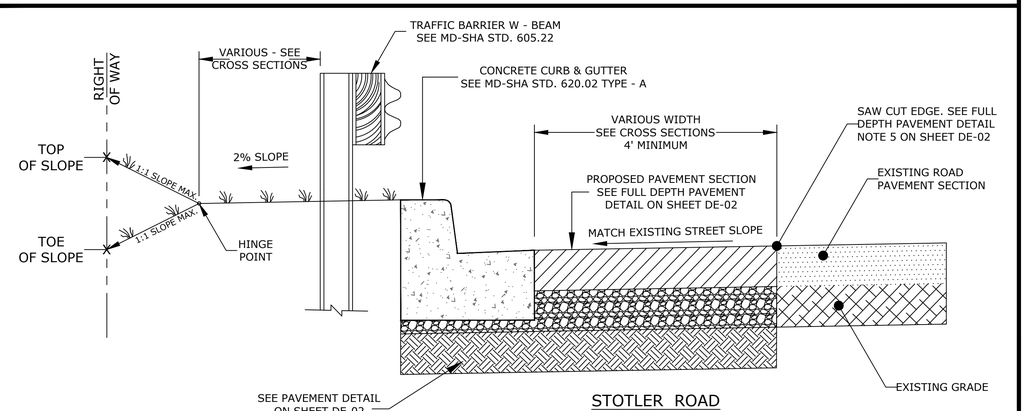

STOTLER ROAD
PAVEMENT EXTENSION DETAIL
WITH CONCRETE CURB AND GUTTER
Sta. 10+89 ℄"B" LT. To Sta. 12+85 ℄"B" LT.
SCALE: NONE

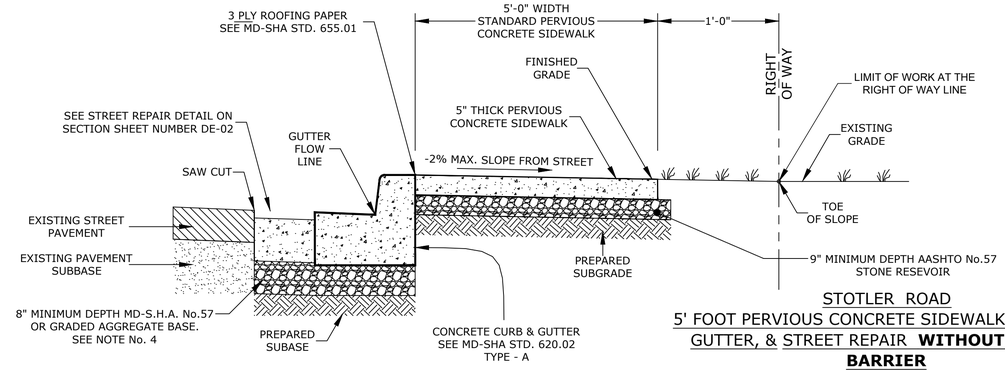

STOTLER ROAD
5' FOOT PERVIOUS CONCRETE SIDEWALK, CURB AND GUTTER, & STREET REPAIR **WITHOUT TRAFFIC BARRIER**
Sta. 16+43 To Sta. 23+36.7
SCALE: NONE

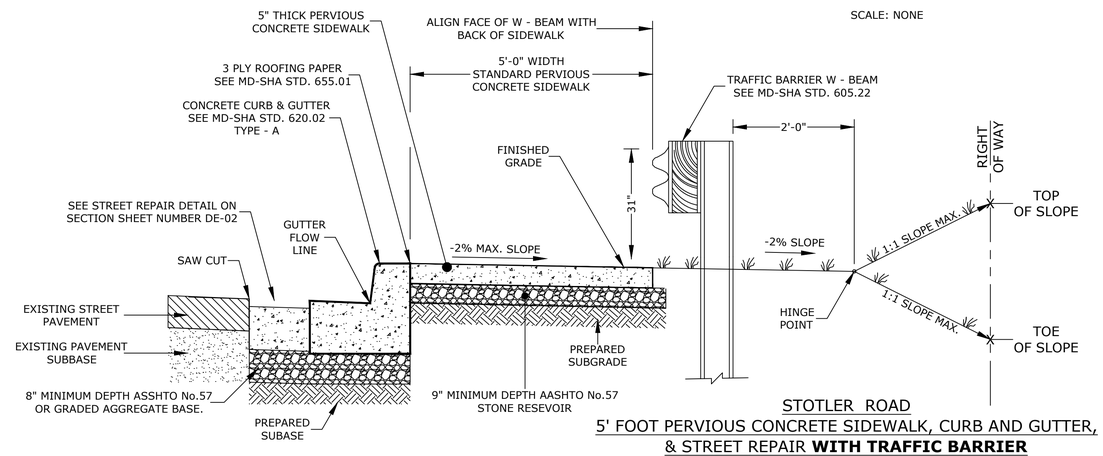

STOTLER ROAD
5' FOOT PERVIOUS CONCRETE SIDEWALK, CURB AND GUTTER, & STREET REPAIR **WITH TRAFFIC BARRIER**
Sta. 115+00 ℄ "A" To Sta. 16+43 ℄ "B"
SCALE: NONE

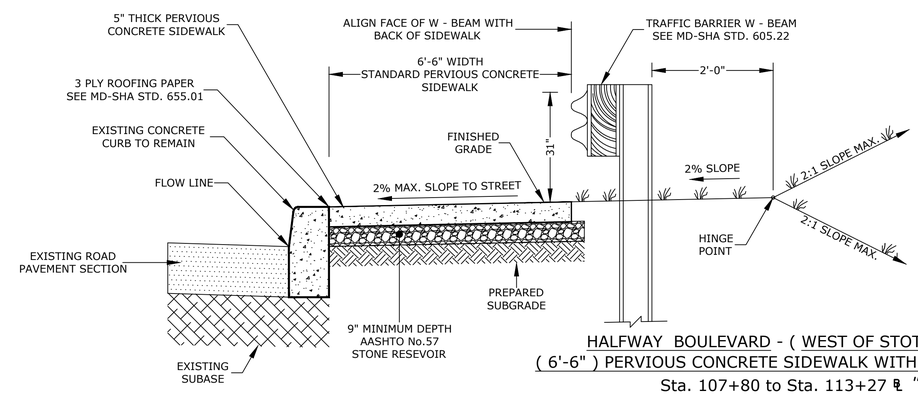

HALFWAY BOULEVARD - (WEST OF STOTLER ROAD)
(6'-6") PERVIOUS CONCRETE SIDEWALK WITH TRAFFIC BARRIER
Sta. 107+80 to Sta. 113+27 ℄ "A"
SCALE: NONE

NOTES:

1. CONCRETE FOR PERVIOUS SIDEWALK SHALL BE MARYLAND S.H.A. MIX NO. PC . ALL PERVIOUS SIDEWALK SHALL BE 6.5' ft. OR 5' ft. WIDE BY 5" DEEP AND SHALL BE PLACED ON A BED OF 9" MINIMUM DEPTH ASSHTO No. 57 CLEAN STONE.
2. ALL SIDEWALK SHALL BE CONSTRUCTED IN COMPLIANCE WITH THE "AMERICANS WITH DISABILITIES ACT" (A.D.A.) REQUIREMENTS. REFER TO SECTION 4.3 FOR INFORMATION CONCERNING "ACCESSIBLE ROUTE".
3. THE CONCRETE CURB AND GUTTER PAN SLOPE SHALL BE 1/2" PER FOOT EXCEPT THROUGH SUPERELEVATED SECTIONS OR WHERE STREETS HAVE A FULL WIDTH CROSS SLOPE (NO CROWN). THEN THE GUTTER PAN ON THE HIGH SIDE OF THE STREET SHALL SLOPE TO MATCH THE ADJACENT PAVEMENT. THE CURB AND GUTTER PAN SHALL BE PLACED MONOLITHIC USING MIX 3 CONCRETE.
4. SUBGRADE TO BE UNCOMPACTED FOR AREAS DESIGNED AS INFILTRATION PRACTICES. FOR OTHER AREAS COMPACT AS SPECIFIED IN THE SPECIFICATIONS. FOR SOFT SOILS, INSTALL GEOGRID FOR GEOTECHNICAL ENGINEER RECOMMENDATIONS. INCLUDE CLASS PE TYPE III GEOTEXTILE BETWEEN STONE BASE AND SUBGRADE.
5. FOR SIDEWALK JOINT LAYOUT, REFER TO MD-SHA STANDARD No. 655.01
6. USE 6" PERFORATED DRAIN PIPE AT LOW POINT OF SIDEWALK WITHIN STONE ACROSS THE ENTIRE WIDTH OF THE SIDEWALK.

NO.	REVISION DESCRIPTION	BY	DATE

DESIGNED BY: PJM
DRAWN BY: GLJ
CHECKED BY: PJM / SH
DATE: 09-15-22

WASHINGTON COUNTY, MARYLAND
DIVISION OF ENGINEERING

Washington County Administrative Annex, Building
747 Northern Avenue, Hagerstown, Maryland, 21742
Phone: 240-313-2460 Fax: 240-313-2401

INTERSECTION SIGNAL & SIDEWALK IMPROVEMENTS
STOTLER RD. & HALFWAY BLVD.
DETAILS

STATE OF MARYLAND
PAMELA JEAN MOHN
No. 39257
PROFESSIONAL ENGINEER
10.7.22

SCALE: NONE
SECTION NO. DE -05
SHEET NO. 16 OF 48
PROJECT NO. 16-045

K:\CADD\28-281 STOTLER ROAD ADA SIDEWALK\CONSTRUCTION\5 DE - DETAILS\28-281 DE.DWG Last Saved: 10/5/2022 12:58 PM

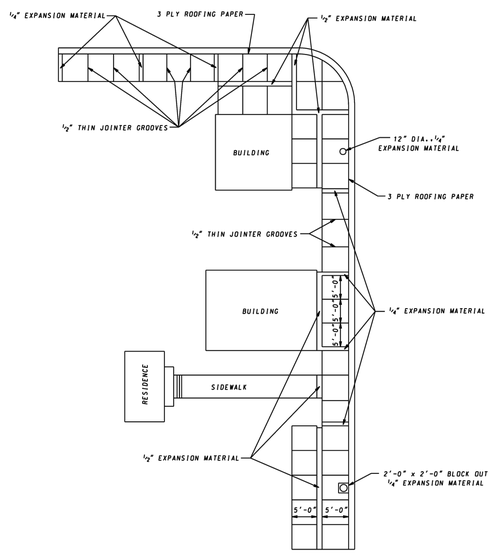

SPECIFICATION	CATEGORY CODE ITEMS	Maryland Department of Transportation STATE HIGHWAY ADMINISTRATION
APPROVED	DIRECTOR - OFFICE OF HIGHWAY DEVELOPMENT	STANDARDS FOR HIGHWAYS AND INCIDENTAL STRUCTURES
SHA State Highway Administration	APPROVAL • SHA / REVISIONS / APPROVAL • FEDERAL HIGHWAY ADMINISTRATION	SIDEWALK EXPANSION JOINTS
	APPROVAL 3-11-64 / APPROVAL 6-9-64	
	REVISED 10-1-01 / REVISED	STANDARD NO. MD 655.01
	REVISED / REVISED	
	REVISED / REVISED	

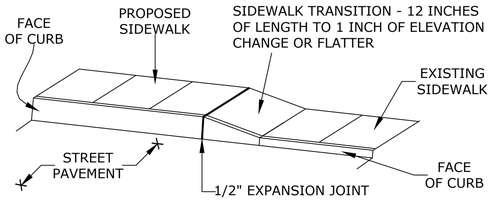

SIDEWALK TRANSITION DETAIL

SCALE: NONE

NOTES:

1. CONCRETE SIDEWALK SHALL BE MD-SHA DEPARTMENT OF TRANSPORTATION MIX NO. 3 OR MIX PC.
2. THE CONCRETE SIDEWALK'S LOCATION, DIMENSIONS, JOINT PATTERN, JOINT TYPES, "BOX OUTS" FOR STRUCTURES, ETC. SHALL BE CONSTRUCTED AS DIRECTED BY THE COUNTY INSPECTOR. THE COUNTY INSPECTOR SHALL BE NOTIFIED IN ADVANCE OF ANY CONCRETE PLACEMENT. CONTACT MISS UTILITY (1-800-257-7777) BEFORE PROCEEDING WITH DEMOLITION OR CONSTRUCTION.
3. IF THE SIDEWALK IS REQUIRED TO BE RAISED IN ELEVATION FROM ITS PREVIOUS ELEVATION, TRANSITION REPLACEMENT SIDEWALK MAY BE REQUIRED. THIS TRANSITION SIDEWALK SHALL BE 12 INCHES IN LENGTH FOR EVERY 1 INCH OF ELEVATION CHANGE OR FLATTER AS DIRECTED BY THE COUNTY INSPECTOR.
4. THE SIDEWALK AND CURB SHALL NOT BE MONOLITHIC. CONCRETE FOR THE SIDEWALK SHALL BE PLACED SEPERATELY FROM THE CONCRETE FOR THE CURB.
5. TRANSVERSE 1/2" EXPANSION JOINTS SHALL BE REQUIRED AT 40' MAXIMUM INTERVALS AND SHALL ALSO BE PLACED ALONG THE BACK SIDE OF CURB WHERE SIDEWALK IS CONFINED BY CURB ON ONE EDGE AND STRUCTURES ON THE OTHER EDGE. EXPANSION JOINT MATERIAL WILL BE POSITIONED TO ALLOW FOR THE REQUIRED 1/2" DEPTH TWO PART ELASTOMERIC GUN-GRADE POLYSULFIDE SEALANT, SONNEBORN SONOLASTIC OR APPROVED EQUAL.
6. WHEN SIGN POSTS EXIST IN THE SIDEWALK (TO BE REMOVED AND REPLACED) A 4" DIAMETER SCHEDULED 40 PVC SLEEVE MUST BE INSTALLED FOR EACH POST AT ITS FORMER LOCATION, UNLESS OTHERWISE DIRECTED BY THE COUNTY INSPECTOR.
7. ALWAYS PROVIDE 36" MINIMUM "CLEAR WIDTH" ON SIDEWALKS IN COMPLIANCE WITH A.D.A. REQUIREMENTS.

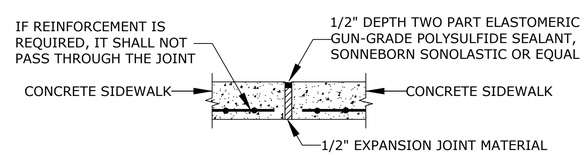

EXPANSION JOINT DETAIL

SCALE: NONE

GENERAL NOTES:

1. TOOL JOINTS SHALL BE EVERY 5'-0" ON STANDARD SIDEWALKS. SQUARE SHAPES ARE DESIRED. 1/2" EXPANSION @ 40' MAXIMUM.
2. TOOL JOINTS AS SPECIFIED OR FIELD DIRECTED SHOULD BE PLACED TO RELIEVE STRESS AT THE CORNERS OF DETECTABLE WARNING SURFACES, INLETS LIDS, AND BOX OUTS AROUND UTILITIES.

NO.	REVISION DESCRIPTION	BY	DATE

DESIGNED BY: PJM
DRAWN BY: GLJ
CHECKED BY: PJM / SH
DATE: 09-15-22

WASHINGTON COUNTY, MARYLAND
DIVISION OF ENGINEERING
Washington County Administrative Annex, Building
747 Northern Avenue, Hagerstown, Maryland, 21742
Phone: 240-313-2460 Fax: 240-313-2401

INTERSECTION SIGNAL & SIDEWALK IMPROVEMENTS STOTLER RD. & HALFWAY BLVD. DETAILS

STATE OF MARYLAND PAMELA JEAN HOVIN No. 39252 PROFESSIONAL ENGINEER
10.7.22

SCALE: NONE
SECTION NO.: DE -06
SHEET NO.: 17 OF 48
PROJECT NO.: 16-045

K:\CADD\28-281 STOTLER ROAD ADA SIDEWALK\CONSTRUCTION\5 DE - DETAILS\28-281 DE.DWG Last Saved: 10/5/2022 12:58 PM

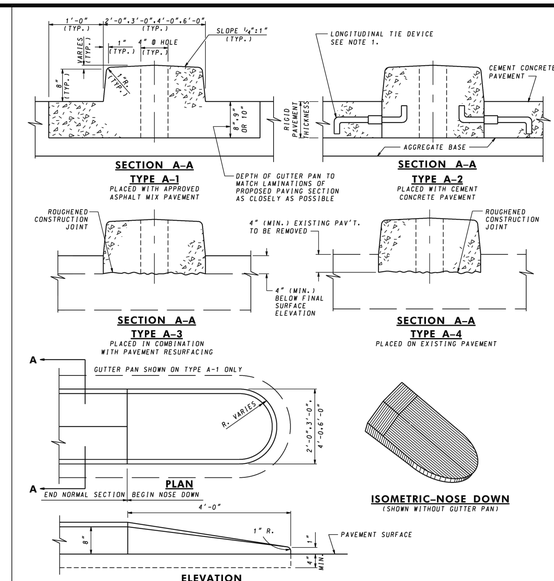

NOTES

1. UNLESS OTHERWISE SPECIFIED, LONGITUDINAL TIE BAR DEVICE, TYPE 'A' OR TYPE 'B', PLACED AT MIDDLE OF KEYWAY & SPACED ACCORDING TO SPECIFICATIONS FOR CONCRETE PAVEMENT SHALL BE USED AT CONSTRUCTION JOINT BETWEEN MONOLITHIC CONCRETE MEDIAN (OR GUTTER PAN) AND CONCRETE PAVEMENT. SEE STANDARD MD 572.61. SOLID BAR AND SLEEVE MAY BE REPLACE BY TUBE WITH INTERNAL THREAD.
2. JOINT SPACING WILL BE A MAXIMUM OF 10'-0" APART. SEE SPECIFICATIONS FOR LOCATION AND DESCRIPTION OF TREATMENT FOR THE TYPES OF JOINTS USED. CONCRETE PAVEMENT. JOINTS SHALL MATCH PAVEMENT JOINTS.
3. ALLOW 4" Ø HOLES IN MEDIAN FOR SIGNS, SPACED AS SHOWN ON PLANS OR AS DIRECTED BY THE ENGINEER.

SPECIFICATION	CATEGORY CODE ITEMS
602	

APPROVED _____ DIRECTOR - OFFICE OF HIGHWAY DEVELOPMENT

APPROVAL • SHA REVISIONS		APPROVAL • FEDERAL HIGHWAY ADMINISTRATION	
APPROVAL	3-15-83	APPROVAL	4-1-83
REVISED	2-25-16	REVISED	2-23-16
REVISED		REVISED	
REVISED		REVISED	

SHA State Highway Administration

Maryland Department of Transportation
STATE HIGHWAY ADMINISTRATION
STANDARDS FOR HIGHWAYS AND INCIDENTAL STRUCTURES

STANDARD MONOLITHIC CONCRETE MEDIAN TYPE 'A'

STANDARD NO. MD 645.01

NO.	REVISION DESCRIPTION	BY	DATE

DESIGNED BY: PJM
DRAWN BY: GLJ
CHECKED BY: PJM / SH
DATE: 09-15-22

WASHINGTON COUNTY, MARYLAND
DIVISION OF ENGINEERING

Washington County Administrative Annex Building
747 Northern Avenue, Hagerstown, Maryland, 21742
Phone: 240-313-2460 Fax: 240-313-2401

INTERSECTION SIGNAL & SIDEWALK IMPROVEMENTS
STOTLER RD. & HALFWAY BLVD.
DETAILS

STATE OF MARYLAND PAMELA JEAN HORN No. 39251 PROFESSIONAL ENGINEER 10.7.22

SCALE: NONE
SECTION NO.: DE -07
SHEET NO.: 18 OF 48
PROJECT NO.: 16-045

K:\CADD\28-281 STOTLER ROAD ADA SIDEWALK\CONSTRUCTION\5 DE - DETAILS\28-281 DE.DWG Last Saved: 10/5/2022 12:59 PM

LINE TABLE

LINE #	LENGTH	DIRECTION
L1	73.80	S67°27'22"E
L2	23.09	S83°41'00"E

CURVE DATA TABLE

CURVE #	RADIUS	ARC LENGTH	DC	DELTA	TANGENT	CORD LENGTH
C1	75.00	21.24	S75° 34' 11.12"E	016°13'37"	10.69	21.17
C2	175.00	41.31	S76° 55' 16.95"E	013°31'26"	20.75	41.21

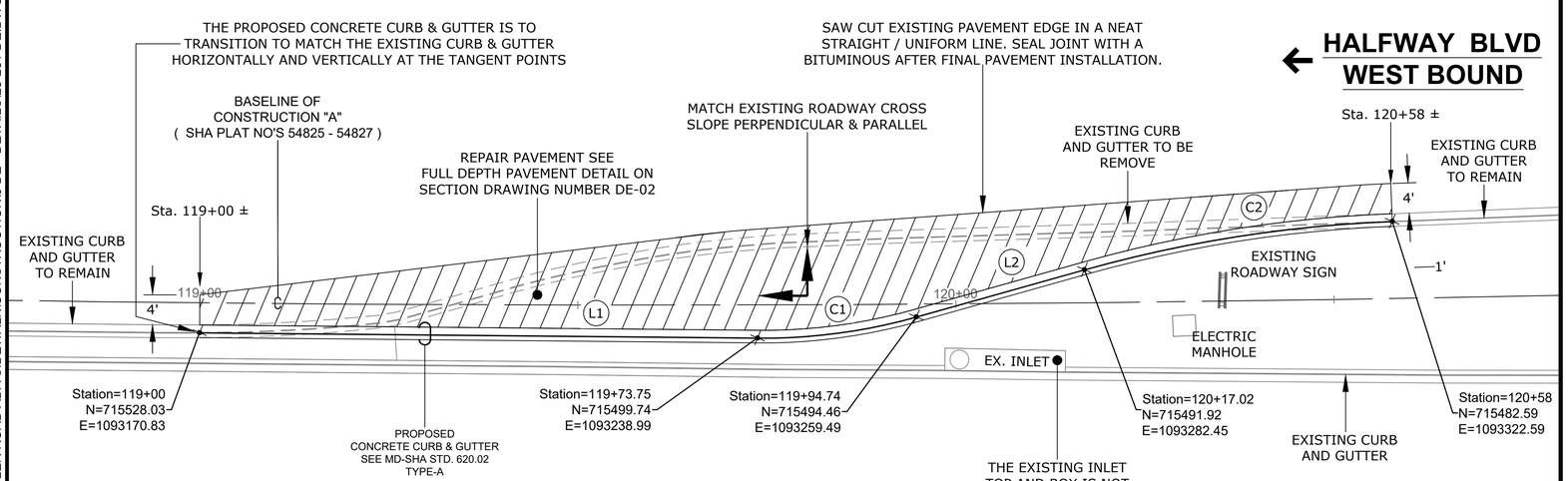

ALL COORDINATES ARE AT THE FACE OF CURB GUTTER FLOW LINE. SEE CONCRETE CURB & GUTTER LEGEND ON SECTION DRAWING NUMBER DE-02

EXTEND LEFT TURN LANE
SCALE: 1" = 10'

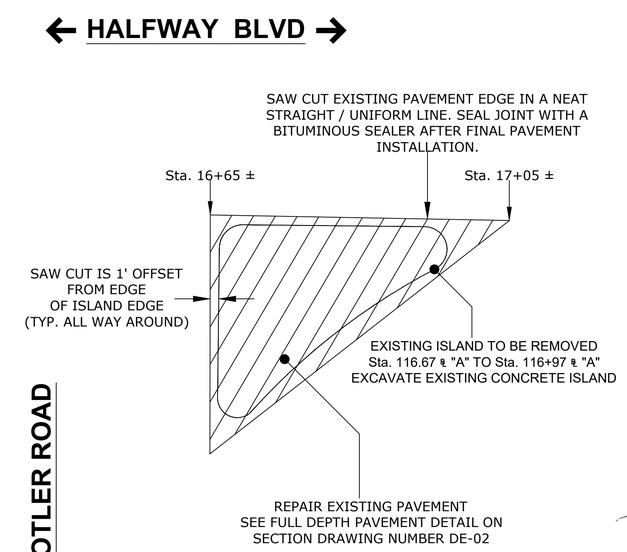

EXISTING ISLAND REMOVAL & STREET REPAIR
SCALE: 1" = 10'

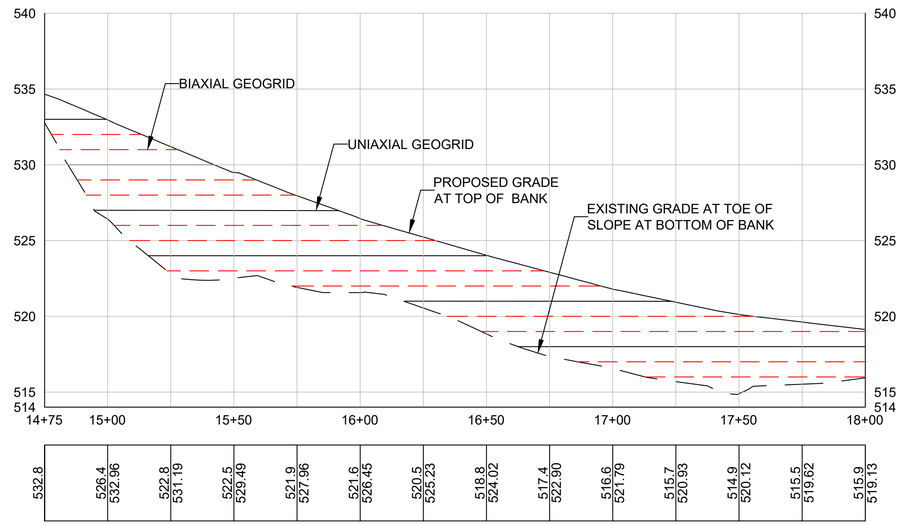

REINFORCE SLOPE
(PROFILE STATION EQUALS STOTLER ROAD BASELINE STATION)

SCALE: HORIZONTAL 1"=30
VERTICAL: 1"=5"

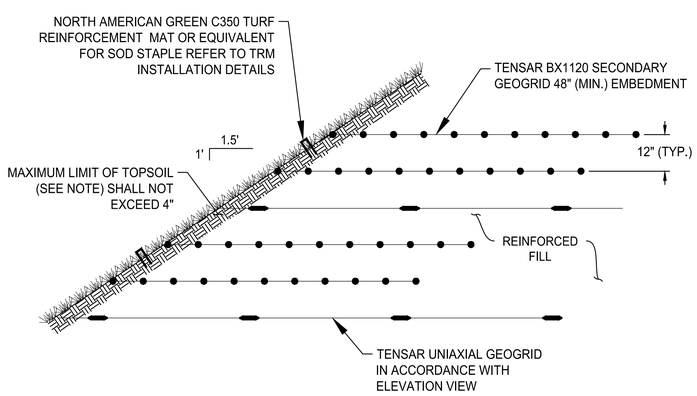

NOTE:

TOPSOIL SHALL BE LOAMY SAND OR FINER GRADATION WITH 10% - 15% ORGANIC CONTENT OR MATERIAL APPROVED BY A QUALIFIED LANDSCAPE ARCHITECT. HYDROSEEDING ON TOP OF EROSION CONTROL PRODUCT MAY RESULT IN POOR VEGETATION ESTABLISHMENT. VEGETATION TYPE SHALL BE SPECIFIED BY A QUALIFIED LANDSCAPE ARCHITECT.

CROSS-SECTION

GRADED SIERRA SLOPE DETAIL

NOT TO SCALE

OR APPROVED EQUAL

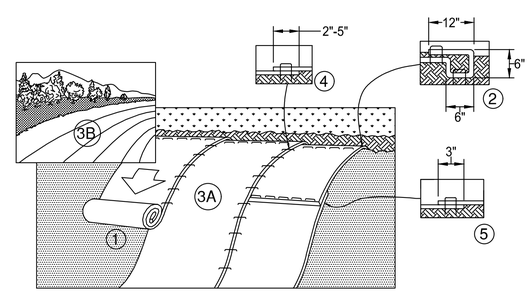

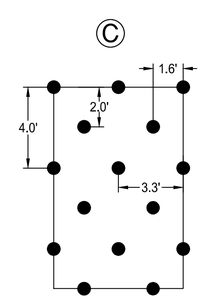

1.7 STAPLES PER SQ. YD.

PLAN VIEW

NOTES:

1. PREPARE SOIL BEFORE INSTALLING ROLLED EROSION CONTROL PRODUCTS (RECP'S), INCLUDING ANY NECESSARY APPLICATION OF LIME, FERTILIZER, AND SEED. NOTE: WHEN USING CELL-O-SEED DO NOT SEED PREPARED AREA. CELL-O-SEED MUST BE INSTALLED WITH PAPER SIDE DOWN.
2. BEGIN AT THE TOP OF THE SLOPE BY ANCHORING THE RECP'S IN A 6" (15 CM) DEEP X 6" (15 CM) WIDE TRENCH WITH APPROXIMATELY 12" (30CM) OF RECP'S EXTENDED BEYOND THE UP-SLOPE PORTION OF THE TRENCH. ANCHOR THE RECP'S WITH A ROW OF STAPLES/STAKES APPROXIMATELY 12" (30 CM) APART IN THE BOTTOM OF THE TRENCH. BACKFILL AND COMPACT THE TRENCH AFTER STAPLING. APPLY SEED TO COMPACTED SOIL AND FOLD REMAINING 12" (30 CM) PORTION OF RECP'S BACK OVER SEED AND COMPACTED SOIL. SECURE RECP'S OVER COMPACTED SOIL WITH A ROW OF STAPLES/STAKES SPACED APPROXIMATELY 12" (30 CM) APART ACROSS THE WIDTH OF THE RECP'S.
3. ROLL THE RECP'S (A.) DOWN OR (B.) HORIZONTALLY ACROSS THE SLOPE. RECP'S WILL UNROLL WITH APPROPRIATE SIDE AGAINST THE SOIL SURFACE. ALL RECP'S MUST BE SECURELY FASTENED TO SOIL SURFACE BY PLACING STAPLES/STAKES IN APPROPRIATE LOCATIONS AS SHOWN IN THE STAPLE PATTERN GUIDE. WHEN USING THE DOT SYSTEM™, STAPLES/STAKES SHOULD BE PLACED THROUGH EACH OF THE COLORED DOTS CORRESPONDING TO THE APPROPRIATE STAPLE PATTERN.
4. THE EDGES OF PARALLEL RECP'S MUST BE STAPLED WITH APPROXIMATELY 2" - 5" (5 CM - 12.5 CM) OVERLAP DEPENDING ON RECP'S TYPE.
5. CONSECUTIVE RECP'S SPLICED DOWN THE SLOPE MUST BE PLACED END OVER END (SHINGLE STYLE) WITH AN APPROXIMATE 3" (7.5 CM) OVERLAP, STAPLE THROUGH OVERLAPPED AREA, APPROXIMATELY 12" (30 CM) APART ACROSS ENTIRE RECP'S WIDTH.

NOTE:*IN LOOSE SOIL CONDITIONS, THE USE OF STAPLE OR STAKE LENGTHS GREATER THAN 6" (15 CM) MAY BE NECESSARY TO PROPERLY SECURE THE RECP'S.

> 1H:1V TURF REINFORCEMENT INSTALLATION

NOT TO SCALE

NO.	REVISION DESCRIPTION	BY	DATE

DESIGNED BY: PJM
DRAWN BY: GLJ
CHECKED BY: PJM / SH
DATE: 09-15-22

WASHINGTON COUNTY, MARYLAND
DIVISION OF ENGINEERING

Washington County Administrative Annex, Building
747 Northern Avenue, Hagerstown, Maryland, 21742
Phone: 240-313-2460 Fax: 240-313-2401

INTERSECTION SIGNAL & SIDEWALK IMPROVEMENTS
STOTLER RD. & HALFWAY BLVD.
REINFORCED SLOPE DETAILS

STATE OF MARYLAND
PAMELA JEAN MOHR
No. 39357
PROFESSIONAL ENGINEER
10.7.22

SCALE
AS NOTED

SECTION NO.
DE -08

SHEET NO.
19 OF 48

PROJECT NO.
16-045

K:\CADD\28-281 STOTLER ROAD ADA SIDEWALK\CONSTRUCTION\5 DE - DETAIL\DETAIL SHEET 08.DWG Last Saved: 9/30/2022 2:51 PM

LEGEND

PROPOSED VIDEO DETECTION CAMERA
a,b

LED EQUIVALENT TO A 250 W COBRA HEAD (HPS) LIGHT FIXTURE
15,16

PROPOSED COUNT DOWN PEDESTRIAN SIGNAL HEAD
17,18

VIDEO DETECTION ZONE
6' 30'
a,b

SIGNS

ONLY — **R3-5 (L) (2) (30"x36")** (11) (14)

ONLY — **R3-5 (R) (2) (30"x36")** (12)

LEFT TURN YIELD ON GREEN — **R10-12 (30"x36")** (21)

HALFWAY BLVD. — **D-3 (2) VARIES x 16"** (13)

STOTLER RD. — **D-3 (1) VARIES x 16"** (9)

STOTLER RD. — **D-3 (1) VARIES x 16"** (10)

PROPOSED AUDIBLE SIGNS

PUSH BUTTON TO CROSS STOTLER ROAD
1 START CROSSING WHEN YOU HEAR CHIRPING
2 FIRST LEFT FINISH CROSSING IF STARTED
3 TIME REMAINING
4 PEDESTRIANS PLEASE TAKE YOUR TIME IN CROSSING
STOTLER ROAD (MULTI TYPE)

R10-3(1) 9" x 15" (19)

R10-3(1) 9" x 15" (20)

16" LED COUNTDOWN PEDESTRIAN SIGNAL (17) (18)

LED SIGNALS

1,2,3,4,5,6,7 & 8

R Y G

12" LED LENS

NEMA PHASING

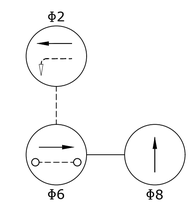

PHASING NOTES:
A. PHASES ASSOCIATED BY A SOLID LINE WILL NOT OPERATE CONCURRENTLY
B. PHASES ASSOCIATED BY A DASHED LINE WILL OPERATE CONCURRENTLY

CONSTRUCTION NOTES

AF 1. CONSTRUCT A NEW CONCRETE MAST ARM POLE FOUNDATION WITH (2) - 4" PVC ELECTRICAL CONDUITS (SCHEDULE 80) IN THE FOUNDATION. (Sta. 116+16.50 ± @ 47.15 ± FT. LEFT)

AF 2. INSTALL 27 FOOT STEEL TWIN MAST ARM POLE ON AN NEW CONCRETE FOUNDATION (SEE NOTE 1 ABOVE) WITH TWIN MAST ARMS (50 FOOT AND 60 FOOT LONG), TRAFFIC SIGNAL HEADS, VIDEO DETECTION CAMERAS, OPTICOM DETECTION EYE, AND SIGNS MOUNTED ON MAST ARM.

AC 3. CONSTRUCT A NEW CONCRETE MAST ARM POLE FOUNDATION WITH (2) - 4" PVC ELECTRICAL CONDUITS (SCHEDULE 80) IN THE FOUNDATION. (Sta. 117+12 ± @ 57.75 ± FT. RIGHT).THE FOUNDATION LOCATION MUST MEET THE LATEST REQUIREMENTS OF MD-MUTCD AND NCHRP ADA PUBLICATIONS. EXACT LOCATION WILL BE FIELD APPROVED BY THE COUNTY ENGINEER.

AC 4. INSTALL 27 FOOT STEEL SINGLE MAST ARM POLE ON AN CONCRETE FOUNDATION (SEE NOTE 3 ABOVE) WITH TWIN MAST ARMS (50 FOOT AND 60 FOOT LONG), TRAFFIC SIGNAL HEADS, VIDEO DETECTION CAMERAS, OPTICOM DETECTION EYE, COUNTDOWN PEDESTRIAN SIGNAL HEAD (17), AUDIBLE / TACTILE PEDESTRIAN PUSH BUTTON WITH A VIBRATING ARROW POINTING RIGHT AND A R10-3 (1) (19) SIGN ALL MOUNTED ON THE MAST ARM POLE. (THE (R10-3) (1) SIGN TO READ "PUSH BUTTON TO CROSS STOTLER ROAD"). INSTALL 20 FOOT STREET LIGHTING ARM WITH LED LUMINAIR.

JA 5. CONSTRUCT ONE NEW CONCRETE PEDESTRIAN POLE FOUNDATIONS WITH (1) - 2" PVC ELECTRICAL CONDUIT AND BREAKAWAY BASE (MD-SHA STANDARD No. 821.01-01) TO BE INSTALLED. THE FOUNDATION LOCATION MUST MEET THE LATEST REQUIREMENTS OF MD-MUTCD AND NCHRP ADA PUBLICATIONS. EXACT LOCATION WILL BE FIELD APPROVED BY THE COUNTY ENGINEER. (Sta. 116+07.88± @ 54.50± FT. RIGHT)

JA 6. INSTALL A 10 FOOT STEEL PEDESTAL POLE ON A BREAKAWAY BASE (Sta. 116+07.88± @ 54.50± FT. RIGHT ±) (MD-SHA STD. No. 821.01-01) ON A CONCRETE FOUNDATION (SEE NOTE 5 ABOVE) WITH A COUNTDOWN PEDESTRIAN SIGNAL HEAD (18) , AUDIBLE / TACTILE PEDESTRIAN PUSH BUTTON WITH A VIBRATING ARROW POINTING LEFT AND A R10-3 (1) SIGN ALL MOUNTED ON THE POLE. (THE R10-3 (1) SIGN (20) TO READ "PUSH BUTTON TO STOTLER ROAD BOULEVARD".)

CC 7. INSTALL NEW S-CABINET (STCA1509) BASE MOUNT CONTROLLER AND CABINET ON A NEW CONCRETE PAD WITH AVAILABLE CONDUITS. EXACT LOCATION WILL BE FIELD APPROVED BY THE COUNTY ENGINEER.

MP 8. INSTALL EMBEDED METER SERVICE PEDESTAL (MD-SHA STANDARD 807.07-01) WITH (1) - 4" SCHEDULE 80 PVC CONDUIT WITH 90 DEGREE BENDS IN PEDESTAL BASE.

AD 9. CONSTRUCT ONE NEW CONCRETE LIGHTING STRUCTURE FOUNDATION (MD-SHA STANDARD No. 801-02) WITH (1) - 2" PVC ELECTRICAL CONDUIT TO BE INSTALLED. THE FOUNDATION LOCATION MUST MEET THE LATEST REQUIREMENTS OD MD-MUTCD. EXACT LOCATION WILL BE FIELD APPROVED BY THE COUNTY ENGINEER. (Sta. 116+11.95± @ 59.74± FT. RIGHT)

AD 10. INSTALL A 30 FOOT STEEL LIGHTING STRUCTURE POLE(MD-SHA STANDARD No. 801-01) WITH BRACKET ARM ON THE NEW CONCRETE FOUNDATION (SEE NOTE 9 ABOVE). INSTALL A 20 FOOT LIGHTING ARM WITH A LED LUMINAIRE.

H 11. INSTALL ELECTRIC HANDHOLE

HALFWAY BLVD. IS ASSUMED TO RUN IN A EAST-WEST DIRECTION

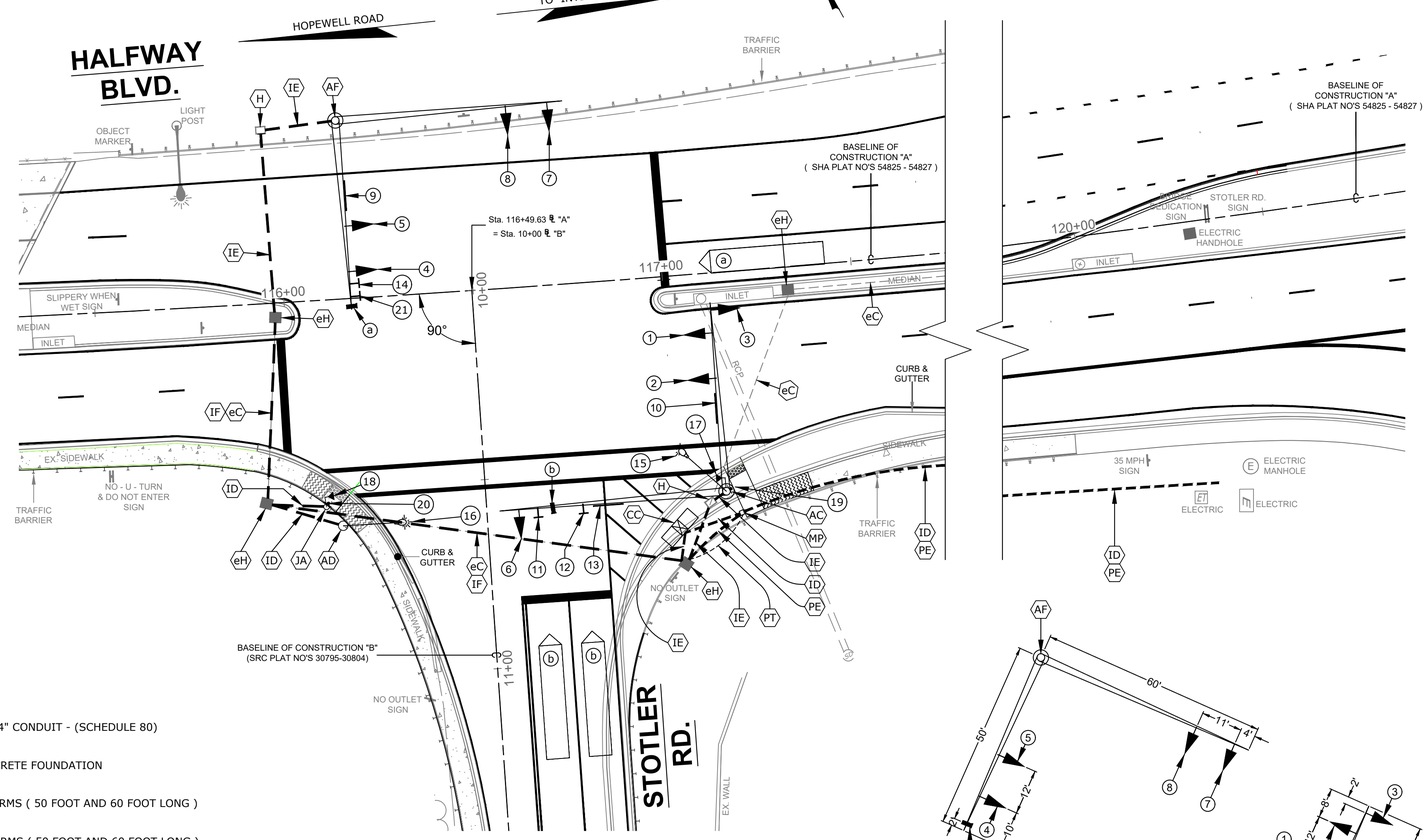

LEGEND

MP = NEW CONCRETE METER PAD AND ELECTRIC METER PEDESTAL

eH = EXISTING HANDHOLE

CC = NEW S-CABINET (STCAB1509) BASE MOUNT CONTROLLER AND CABINET ON A NEW CONCRETE PAD

ID = NEW 1-2" CONDUIT - (SCHEDULE 80)

IE = NEW (2) - 4" CONDUIT - (SCHEDULE 80)

eC = EXISTING (1)-4" CONDUIT - (SCHEDULE 80) WITH PULL STRING OR CABLES

H = NEW HANDHOLE

PE = NEW UNDERGROUND ELECTRIC SERVICE - 1-4" CONDUIT - (SCHEDULE 80)

JA = NEW 10 FOOT PEDESTAL POLE ON NEW CONCRETE FOUNDATION

AF = 27 FOOT MAST ARM POLE WITH TWIN MAST ARMS (50 FOOT AND 60 FOOT LONG)

AC = 27 FOOT MAST ARM POLE WITH TWIN MAST ARMS (50 FOOT AND 60 FOOT LONG)

PT = NEW UNDERGROUND TELEPHONE SERVICE

IF = NEW (1) - 4" CONDUIT - (SCHEDULE 80)

AD = NEW 30 FOOT LIGHTING STRUCTURE ON NEW CONCRETE FOUNDATION

GRAPHIC SCALE
20 0 10 20 40 80
(IN FEET)
1 inch = 20 ft.

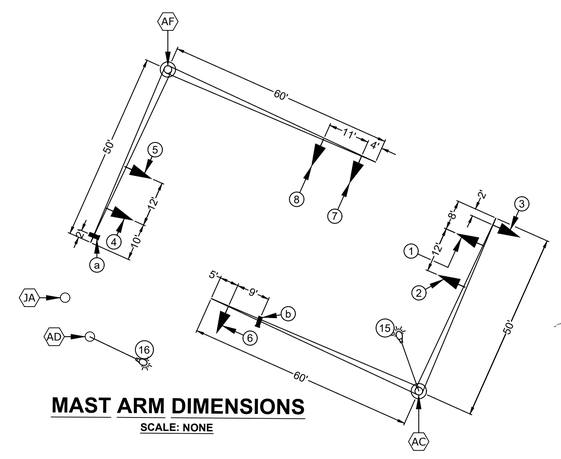

MAST ARM DIMENSIONS

SCALE: NONE

NO.	REVISION DESCRIPTION	BY	DATE

DESIGNED BY: PJM
DRAWN BY: GLJ
CHECKED BY: TP / PJM
DATE: 09-15-22

WASHINGTON COUNTY, MARYLAND
DIVISION OF ENGINEERING

Washington County Administrative Annex Building
747 Northern Avenue, Hagerstown, Maryland, 21742
Phone: 240-313-2460 Fax: 240-313-2401

INTERSECTION SIGNAL & SIDEWALK IMPROVEMENTS
STOTLER RD. & HALFWAY BLVD.
TRAFFIC SIGNAL - PLAN SHEET

STATE OF MARYLAND PAMELA JEAN WORN No. 39357 PROFESSIONAL ENGINEER 10.7.22

SCALE 1" = 20'
SECTION NO. SG - 01
SHEET NO. 20 OF 48
PROJECT NO. 16-045

K:\CADD\28-281 STOTLER ROAD ADA SIDEWALK\CONSTRUCTION\13 SG - SIGNAL PLANS\28-281 SG PLANS.DWG Last Saved: 10/5/2022 1:06 PM

	1	2	3	4	5	6	7	8	16	17
	R Y G	R Y G	R Y G	R Y G	R Y G	R Y G	R Y G	R Y G		
PHASE 2 & 6	G	G	G	G	G	R	R	R	W	W
PEDESTRIAN CLEARANCE	G	G	G	G	G	R	R	R	FDW	FDW
2 & 6 CHANGE	Y	Y	Y	Y	Y	R	R	R	DW	DW
PHASE 8	R	R	R	R	R	G	G	G	DW	DW
8 CHANGE	R	R	R	R	R	Y	Y	Y	DW	DW
FLASHING OPERATION	FY	FY	FY	FY	FY	FR	FR	FR	DARK	DARK

PHASING CHART

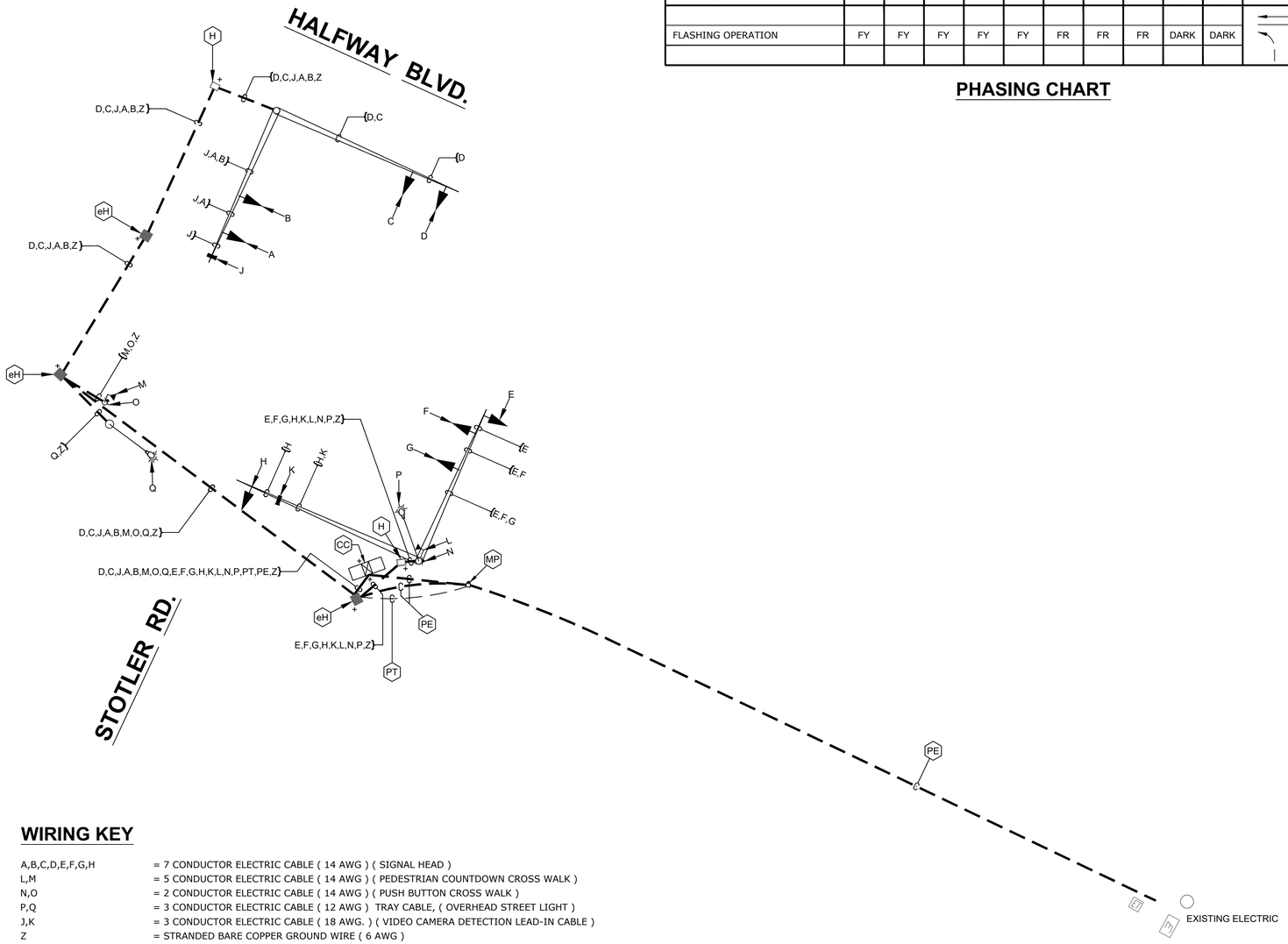

WIRING KEY

A,B,C,D,E,F,G,H	= 7 CONDUCTOR ELECTRIC CABLE (14 AWG) (SIGNAL HEAD)
L,M	= 5 CONDUCTOR ELECTRIC CABLE (14 AWG) (PEDESTRIAN COUNTDOWN CROSS WALK)
N,O	= 2 CONDUCTOR ELECTRIC CABLE (14 AWG) (PUSH BUTTON CROSS WALK)
P,Q	= 3 CONDUCTOR ELECTRIC CABLE (12 AWG) TRAY CABLE, (OVERHEAD STREET LIGHT)
J,K	= 3 CONDUCTOR ELECTRIC CABLE (18 AWG.) (VIDEO CAMERA DETECTION LEAD-IN CABLE)
Z	= STRANDED BARE COPPER GROUND WIRE (6 AWG)
PE	= UNDERGROUND ELECTRIC SERVICE - 3 WIRE, 1 CONDUCTOR (4 AWG)
PT	= UNDERGROUND TELEPHONE SERVICE WITH 1 COMMUNICATION CABLE (4 AWG)
+	= 3/4" INCH X 10 FOOT GROUNDING ROD WITH 6 GUAGE SOLID COPPER WIRE TO THE HANDHOLE FRAME
MP	= METERED SERVICE PEDESTAL
CC	= CONTROLLER, CABINET, & CONCRETE PAD

PROJECT DESCRIPTION

GENERAL:

THIS PROJECT INVOLVES THE INSTALLATION OF A TRAFFIC CONTROL SIGNAL AT THE INTERSECTION OF STOTLER ROAD AND HALFWAY BOULEVARD. HALFWAY BLVD. IS THE MAJOR ROAD AND IS CONSIDERED TO RUN IN AN EAST / WEST DIRECTION.

INTERSECTION OPERATIONS:

AN EIGHT PHASE, FULL TRAFFIC ACTUATED NEMA CONTROLLER HOUSED IN A BASE MOUNTED CABINET IS TO BE INSTALLED ON A PROPOSED CONCRETE PAD:

1) **THE CURRENT CONFIGURATION IS A TEE INTERSECTION, WITH SPACE IN THE CONDUITS AND ON THE MAST ARMS FOR POSSIBLE FUTURE 4TH LEG. THE EAST APPROACH OF HALFWAY BOULEVARD, WILL HAVE A PERMISSIVE LEFT TURN ONTO STOTLER ROAD.**
2) **THE NORTH MOVEMENT WILL INCLUDE A LEFT AND RIGHT EXCLUSIVE TURN ONTO HALFWAY BLVD.**
3) **THERE WILL BE A CONCURRENT PEDESTRIAN PHASE ACROSS STOTLER ROAD WITH THE GREEN CYCLE FOR HALFWAY BOULEVARD.**
4) **RIGHT - TURN - ON - RED WILL BE ALLOWED FOR THE SOUTH - WEST APPROACHES TO THIS INTERSECTION.**

APS NOTES:

1) **APS WILL FUNCTION AS FOLLOWS FOR CROSSING STOTLER ROAD:**
   a. **WHEN A PEDESTRIAN LOCATES AND PRESSES PUSHBUTTON FOR AN EXTENDED TIME, THE PUSH BUTTON UNIT WILL ANNOUNCE THE FOLLOWING MESSAGE; "WAIT TO CROSS STOTLER ROAD.**
   b. **WHEN THE WALK PHASE BEGINS THE PUSH BUTTON UNIT WILL PROVIDE RAPID TICKS WHICH LAST THE DURATION OF THE WALK PHASE.**

SIGNAL GENERAL NOTES:

1. THE CONTRACTOR SHALL VERIFY ALL PROPOSED POLE LOCATIONS PRIOR TO INSTALLATION. ALL POLES, HANDHOLES, CONDUITS UNDER PAVEMENT, CABINETS AND METERED SERVICE PEDESTALS SHALL BE STAKED OUT AND EVERY LOCATION APPROVED BY THE ENGINEER BEFORE ANY WORK IS PERFORMED.
2. THE CONTRACTOR SHALL BE RESPONSIBLE FOR TERMINATING ALL SIGNAL CABLE TO THE APPROPRIATE TERMINALS AND PROPERLY LABELING EACH CABLE. TAGS SHALL BE INSTALLED ON EACH CABLE IN THE CONTROLLER CABINET AS WELL AS EACH HANDHOLE.
3. ALL UNUSED CABLE SHALL BE REMOVED AND DISPOSED OF BY THE CONTRACTOR.
4. NO. 6 AWG STRANDED BARE COPPER GROUND WIRE INSTALLED IN EACH SHA HANDHOLE SHALL CONNECT THE GROUNDING LUG ON THE LID / COLLAR TO THE GROUND ROD IN THE BASE OF THE HANDHOLE TO PROPERLY GROUND THE STRUCTURE.
5. ALL TRAFFIC SIGNAL FOUNDATIONS SHALL BE INSTALLED AT THE FINAL SIDEWALK OR CURB GRADE FOR CLOSED SECTIONS, HIGHEST ROADWAY PROFILE GRADE FOR OPEN SECTIONS, TO MEET CLEARANCES AS SPECIFIED IN SHA STANDARDS MD 816.03, MD 818.01, MD 818.02 AND MD 818.04. THE CONTRACTOR SHALL VERIFY ULTIMATE GRADES PRIOR TO THE INSTALLATION OF ALL SIGNAL EQUIPMENT.
6. UNDERGROUND UTILITIES SHOWN ON THESE PLANS ARE SCHEMATIC ONLY AND MAY NOT BE COMPLETE. THE CONTRACTOR SHALL BE RESPONSIBLE FOR NOTIFYING "MISS UTILITY" PRIOR TO CONSTRUCTION SO THAT ALL UTILITIES MAY BE LOCATED IN THE FIELD. IF THE CONTRACTOR PERCEIVES THAT A CONFLICT BETWEEN THE UTILITIES AND THE TRAFFIC SIGNAL WILL OCCUR, THE CONTRACTOR SHALL NOTIFY THE PROJECT ENGINEER IMMEDIATELY SO THAT THE CONFLICT MAY BE RESOLVED.
7. ALL PEDESTAL FOUNDATION TOPS SHALL BE INSTALLED FLUSH WITH SIDEWALK GRADE OR BUILT INTO BACKER CURB.
8. THE CONTRACTOR SHALL INTEGRATE PROPOSED / EXISTING CONCRETE FOUNDATIONS WITH NEW CURB OR SIDEWALK RAMPS WHERE NECESSARY. THE FOUNDATIONS SHALL BE FLUSH WITH, AND PART OF, THE FINAL CURB OR SIDEWALK GRADE TO INCREASE ACCESSIBILITY FOR PEDESTRIANS.
9. LOCATION OF ACCESSIBLE PEDESTRIAN SIGNAL PUSHBUTTONS MUST MEET LOCATION REQUIREMENTS OF MDMUTCD CHAPTER 4E "PEDESTRIAN CONTROL FEATURES" AND FIGURES 4E-3 AND 4E-4, AND THE LATEST NCHRP PUBLICATION, "ACCESSIBLE PEDESTRIAN SIGNALS GUIDE TO BEST PRACTICE."
10. PUSHBUTTONS ARE TO BE LOCATED SO THAT THEY CAN BE ACTIVATED BY A PERSON IN A WHEELCHAIR REACHING LESS THAN 18" FROM A 60" X 60" LEVEL LANDING AREA WITH A CROSS SLOPE OF LESS THAN OR EQUAL TO 2%.
11. THE 10' SEPARATION BETWEEN PUSHBUTTONS IS TO BE MEASURED FROM FACE OF PUSHBUTTON TO FACE OF PUSHBUTTON, NOT CENTER OF POLE TO CENTER OF POLE.
12. PUSHBUTTON ARROWS AND SIGNS ARE TO BE ORIENTED PARALLEL TO THE CROSSING FOR WHICH THEY ARE INTENDED.
13. VIDEO DETECTION CAMERA ALIGNMENT SHALL BE COORDINATED WITH THE ENGINEER.
14. WITHIN 36 IN. OF UNDERGROUND UTILITY LOCATIONS, THE CONTRACTOR SHALL BE REQUIRED TO EXCAVATE FOR FOUNDATION AND CONDUIT BY HAND.
15. HAND DIGGING FOR INSTALLATION OR REMOVAL OF SIGNAL EQUIPMENT, SIGNS, CURB AND SIDEWALK SHALL BE INCIDENTAL TO THE ITEMS IN THE EQUIPMENT LIST. NO ADDITIONAL COMPENSATION WILL BE PROVIDED FOR HAND DIGGING.
16. THE CONTRACTOR SHALL EXCAVATE CONCRETE FOUNDATIONS AS NEEDED TO INSTALL NEW FOUNDATIONS. NO ADDITIONAL COMPENSATION WILL BE PROVIDED FOR EXCAVATING TO THE REQUIRED DEPTH FOR NEW FOUNDATIONS.
17. ALL PROPOSED SIGNS MOUNTED ON TRAFFIC SIGNAL STRUCTURES SHALL BE MOUNTED IN ACCORDANCE WITH SHA TYPICAL TYP 813.99.01 AND TYP 813.99.04. ALL PROPOSED R10-3(1) SIGNS SHALL BE MOUNTED IN ACCORDANCE WITH SHA STANDARD MD 813.07. ALL MOUNTING HARDWARE SHALL BE INCIDENTAL TO SHEET ALUMINUM SIGNS ITEM.

NO.	REVISION DESCRIPTION	BY	DATE

DESIGNED BY: PJM
DRAWN BY: GLJ
CHECKED BY: PJM / TP
DATE: 09-15-22

WASHINGTON COUNTY, MARYLAND
DIVISION OF ENGINEERING
Washington County Administrative Annex Building
747 Northern Avenue, Hagerstown, Maryland, 21742
Phone: 240-313-2460 Fax: 240-313-2401

INTERSECTION SIGNAL & SIDEWALK IMPROVEMENTS
STOTLER RD. & HALFWAY BLVD.
TRAFFIC SIGNAL - WIRING PLAN & NOTES

STATE OF MARYLAND
PAMELA JEAN MOHN
No. 39251
PROFESSIONAL ENGINEER
10.7.22

SCALE: NONE
SECTION NO. SG - 02
SHEET NO. 21 OF 48
PROJECT NO. 16-045

K:\CADD\28-281 STOTLER ROAD ADA SIDEWALK\CONSTRUCTION\13 SG - SIGNAL PLANS\28-281 WIRING PLAN.DWG Last Saved: 10/5/2022 1:20 PM

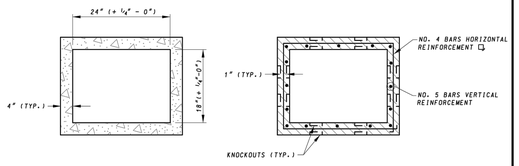

TOP VIEW

SECTION A - A

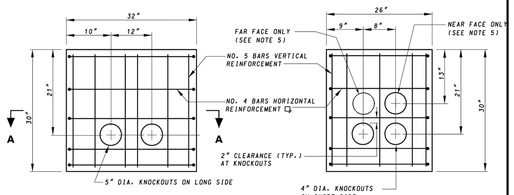

FRONT VIEW

SIDE VIEW

NOTES:

1. HANDHOLE CONCRETE SHALL BE MIX NO. 6.
2. ALL SPALLS AND VOIDS SHALL BE PATCHED.
3. ALL REINFORCEMENT SHALL BE CENTERED IN THE FORM WALLS PRIOR TO THE CONCRETE PLACEMENT.
4. CLEARANCE 1" MIN. FROM SIDE WALLS TO REINFORCEMENT.
5. TO BE USED FOR NON-INVASIVE PROBE INSTALLATION ONLY.

SPECIFICATION 811	CATEGORY CODE ITEMS
APPROVED	DIRECTOR - OFFICE OF TRAFFIC AND SAFETY

APPROVAL • SHA REVISIONS		APPROVAL • FEDERAL HIGHWAY ADMINISTRATION	
APPROVAL	7-1-94	APPROVAL	7-1-94
REVISED	5-17-07	REVISED	5-2-07
REVISED		REVISED	
REVISED		REVISED	

Maryland Department of Transportation
STATE HIGHWAY ADMINISTRATION
STANDARDS FOR HIGHWAYS AND INCIDENTAL STRUCTURES

HANDHOLE (MATERIALS DETAIL)

STANDARD NO. MD 811.01

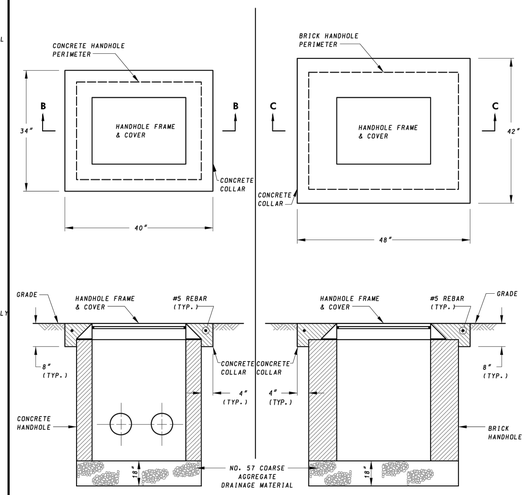

TRAFFIC SIGNAL HANDHOLE INSTALLATION DETAIL SECTION B-B

ALTERNATE TRAFFIC SIGNAL HANDHOLE INSTALLATION DETAIL SECTION C-C

NOTE:

CONCRETE COLLAR SHALL NOT BE INSTALLED IN SIDEWALK AREA.

SPECIFICATION 811	CATEGORY CODE ITEMS
APPROVED	DIRECTOR - OFFICE OF TRAFFIC AND SAFETY

APPROVAL • SHA REVISIONS		APPROVAL • FEDERAL HIGHWAY ADMINISTRATION	
APPROVAL	7-1-94	APPROVAL	7-1-94
REVISED	5-17-07	REVISED	5-2-07
REVISED		REVISED	
REVISED		REVISED	

Maryland Department of Transportation
STATE HIGHWAY ADMINISTRATION
STANDARDS FOR HIGHWAYS AND INCIDENTAL STRUCTURES

HANDHOLE INSTALLATION

STANDARD NO. MD 811.03

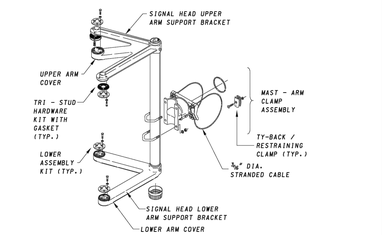

ONE-WAY, FIVE - SECTION 12" SIGNAL HEADS

NOTES:

1. ALL CAST MOUNTING HARDWARE SHALL BE ALUMINUM WITH TRIVALENT CHROMATE FINISH.
2. ALL BOLTS SHALL BE STAINLESS STEEL.
3. BRACKET SHALL ADJUST IN FOUR DIRECTIONS.
4. UPPER AND LOWER ARMS SHALL BE CAST FROM 319 ALUMINUM ALLOY.
5. VERTICAL SUPPORT TUBE SHALL BE DOUBLE GUSSETED "C" SHAPED AND EXTRUDED FROM 6062 - T6 ALUMINUN ALLOY.
6. MAST ARM CLAMP ASSEMBLY SHALL BE CAST FROM 713 ALUMINUN.
7. STRANDED CABLE SHALL BE 3/16" DIA. STAINLESS STEEL.FABRICATED IN ONE PIECE.
8. CUT VERTICAL SUPPORT TUBE TO PROJECT 1" ± 1/2" ABOVE SIGNAL HEAD TOP SUPPORT BRACKET.
9. CABLE ENTRY HOLE SHALL BE ENLARGED TO ACCOMMODATE THE SIZE AND TYPE OF CABLE(S).
10. WHEN ASSEMBLED, THE RECEIVING AND INDENTED PORTION OF THE CLAMP ASSEMBLY SHALL CONSIST OF TWO MIRRORED HALVES. THE CLAMP ASSEMBLY SHALL BE INVERSELY TIGHTENED AROUND THE MAST ARM OR POLE.
11. THE PROTRUDING PORTION OF THE CLAMP ASSEMBLY, WHICH FITS IN THE RECEIVING AND INDENTED PORTION, SHALL HAVE AN INTEGRALLY CAST FLANGE TO PREVENT SEPARATION FROM THE RECEIVING AND INDENTED SECTION.

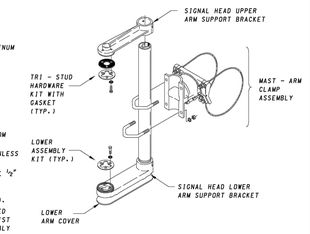

ONE-WAY, THREE OR FOUR - SECTION 12" SIGNAL HEADS THREE - SECTION - 12"/8" COMBINATIONS

SPECIFICATION 814	CATEGORY CODE ITEMS
APPROVED	DIRECTOR - OFFICE OF TRAFFIC AND SAFETY

APPROVAL SHA REVISIONS		APPROVAL FEDERAL HIGHWAY ADMINISTRATION	
APPROVAL	7-1-94	APPROVAL	7-1-94
REVISED	5-17-07	REVISED	5-2-07
REVISED	4-16-19	REVISED	3-25-19
REVISED		REVISED	

MARYLAND DEPARTMENT OF TRANSPORTATION
STATE HIGHWAY ADMINISTRATION

STANDARDS FOR HIGHWAYS AND INCIDENTAL STRUCTURES

SIGNAL HEAD MOUNTING DETAILS RIGID MOUNT

STANDARD NO. MD 814.01

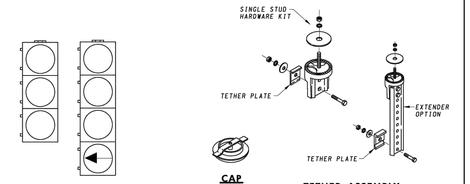

ONE-WAY THREE OR FOUR - SECTION 12" SIGNAL HEADS THREE - SECTION 12"/8" COMBINATIONS

CAP CLOSURE KIT

TETHER ASSEMBLY

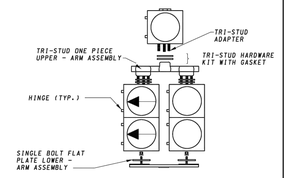

ONE-WAY, FIVE-SECTION 12" SIGNAL HEADS

NOTES:

1. ALL CAST MOUNTING HARDWARE SHALL BE ALODINE FINISHED ALUMINUM.
2. ALL BOLTS SHALL BE STAINLESS STEEL.

MATERIALS

TYPE OF INDICATION	RIGID MOUNTED	SPAN WIRE MOUNTED
THREE SECTION 8"/12" COMBINATION	POLYCARBONATE	POLYCARBONATE
PEDESTRIAN SIGNAL INDICATION	ALUMINUM	N/A
FIVE SECTION 12" SIGNAL HEAD	POLYCARBONATE	TOP SIGNAL INDICATION SHALL BE ALUMINUM. BOTTOM 4 SECTION SHALL BE POLYCARBONATE.
OPTICALLY PROGRAMMED SIGNAL HEAD INDICATION	N/A	N/A
ONE, TWO, THREE, OR FOUR SECTION 12" SIGNAL HEAD	POLYCARBONATE	POLYCARBONATE

SPECIFICATION 814	CATEGORY CODE ITEMS
APPROVED	DIRECTOR - OFFICE OF TRAFFIC AND SAFETY

APPROVAL SHA REVISIONS		APPROVAL FEDERAL HIGHWAY ADMINISTRATION	
APPROVAL	7-1-94	APPROVAL	7-1-94
REVISED	5-17-07	REVISED	5-2-07
REVISED	4-16-19	REVISED	3-25-19
REVISED		REVISED	

MARYLAND DEPARTMENT OF TRANSPORTATION
STATE HIGHWAY ADMINISTRATION

STANDARDS FOR HIGHWAYS AND INCIDENTAL STRUCTURES

SIGNAL HEAD MOUNTING DETAILS

STANDARD NO. MD 814.02

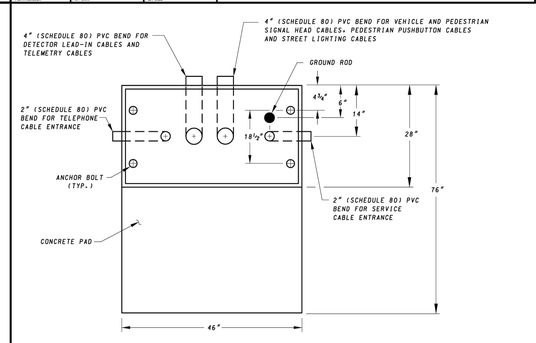

PLAN VIEW

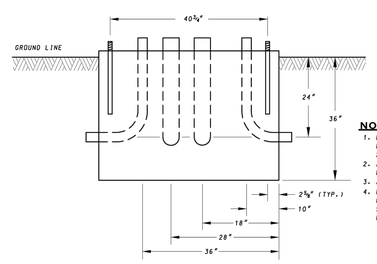

NOTES:

1. BENDS, GROUND ROD, AND ANCHOR BOLTS TO PROJECT ABOVE BASE 2 1/2" ± 1/2".
2. ALL CONDUIT AND GROUND ROD LOCATIONS ± 1/2".
3. ALL ANCHOR BOLT LOCATIONS ± 1/4".
4. REFER TO FOUNDATION DETAILS FOR BASE MOUNTED CABINET STANDARD PLATE FOR CONCRETE PAD DETAILS.

SPECIFICATION 816	CATEGORY CODE ITEMS
APPROVED	DIRECTOR - OFFICE OF TRAFFIC AND SAFETY

APPROVAL • SHA REVISIONS		APPROVAL • FEDERAL HIGHWAY ADMINISTRATION	
APPROVAL	7-1-94	APPROVAL	7-1-94
REVISED	5-17-07	REVISED	5-2-07
REVISED		REVISED	
REVISED		REVISED	

Maryland Department of Transportation
STATE HIGHWAY ADMINISTRATION
STANDARDS FOR HIGHWAYS AND INCIDENTAL STRUCTURES

NEMA SIZE 6 BASE MOUNTED CABINET LAYOUT

STANDARD NO. MD 816.02

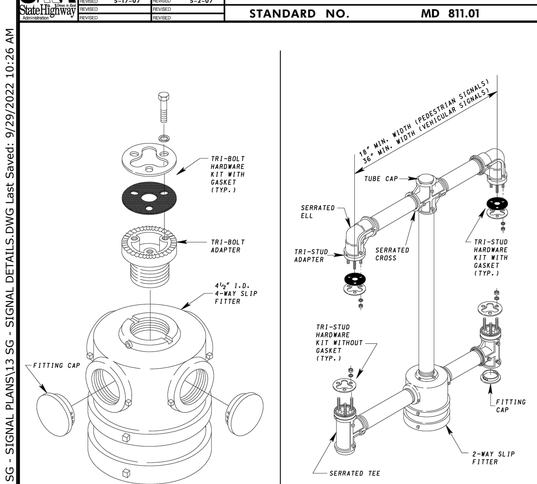

TOP POLE MOUNTING FOR THREE & FOUR-WAY SIGNAL

TOP POLE MOUNTING FOR TWO-WAY SIGNAL

NOTES:

1. ALL CAST MOUNTING HARDWARE SHALL BE ALODINE FINISHED ALUMINUM.
2. ALL BOLTS SHALL BE STAINLESS STEEL.

SPECIFICATION 814	CATEGORY CODE ITEMS
APPROVED	DIRECTOR - OFFICE OF TRAFFIC AND SAFETY

APPROVAL SHA REVISIONS		APPROVAL FEDERAL HIGHWAY ADMINISTRATION	
APPROVAL	10-10-00	APPROVAL	2-1-01
REVISED	5-17-07	REVISED	5-2-07
REVISED		REVISED	
REVISED		REVISED	

REFERENCED ON: MD 817.01

Maryland Department of Transportation
STATE HIGHWAY ADMINISTRATION
STANDARDS FOR HIGHWAYS AND INCIDENTAL STRUCTURES

TOP POLE MOUNTING FOR VEHICULAR AND PEDESTRIAN SIGNAL HEADS

STANDARD NO. MD 814.04

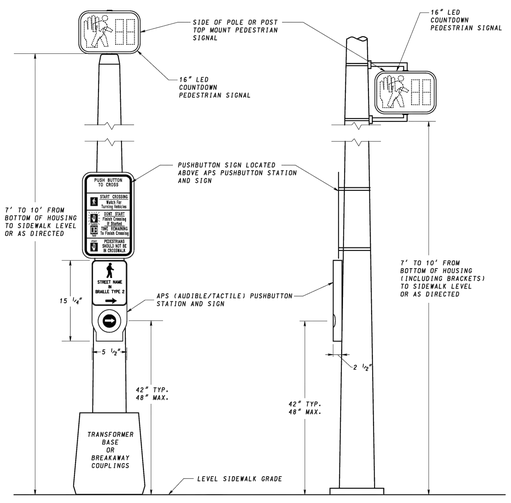

PEDESTAL POLE

SIGNAL POLE

NOTES:

1. PUSHBUTTON SIGN SHALL BE MOUNTED DIRECTLY ABOVE APS UNIT.
2. WHEN CUTTING IS REQUIRED, CONTRACTOR SHALL CONFIRM PROPER HEIGHT OF PEDESTAL IS MAINTAINED PRIOR TO CUTTING POLE.
3. REFER TO POLE MOUNTING FOR PEDESTRIAN SIGNAL HEADS STANDARD PLATES FOR DETAILS.
4. APS PUSHBUTTON STATION AND SIGN DIMENSIONS ARE APPROXIMATE.

SPECIFICATION 817	CATEGORY CODE ITEMS
APPROVED	DIRECTOR - OFFICE OF TRAFFIC AND SAFETY

APPROVAL SHA REVISIONS		APPROVAL FEDERAL HIGHWAY ADMINISTRATION	
APPROVAL	9-25-07	APPROVAL	9-18-07
REVISED	4-16-19	REVISED	3-25-19
REVISED		REVISED	
REVISED		REVISED	

MARYLAND DEPARTMENT OF TRANSPORTATION
STATE HIGHWAY ADMINISTRATION

STANDARDS FOR HIGHWAYS AND INCIDENTAL STRUCTURES

ACCESSIBLE PEDESTRIAN SIGNAL (APS) PUSHBUTTON LOCATION ON POLE

STANDARD NO. MD 817.01

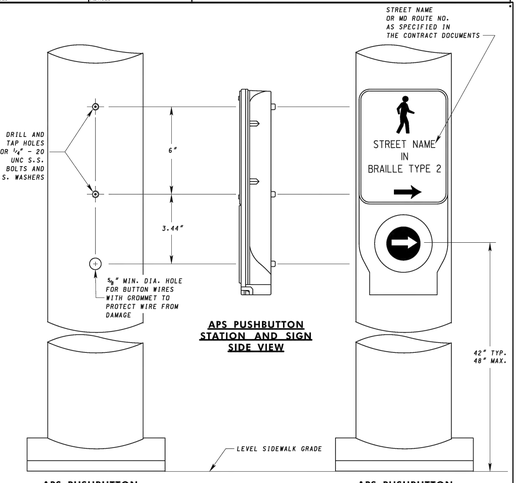

APS PUSHBUTTON STATION AND SIGN SIDE VIEW

APS PUSHBUTTON STATION AND SIGN TEMPLATE

APS PUSHBUTTON STATION AND SIGN ASSEMBLY

NOTES:

1. PUSH BUTTON ASSEMBLY SHALL BE SECURED TO WOOD POLES WITH 2 1/2" LAG BOLTS.
2. LOCATION OF ACCESSIBLE PEDESTRIAN SIGNAL PUSHBUTTONS MUST MEET LOCATION REQUIREMENTS OF WOMUTCD AND THE LATEST NCHRP PUBLICATION, "ACCESSIBLE PEDESTRIAN SIGNALS: A GUIDE TO BEST PRACTICE." IF NOT MET, THE CONTRACTOR IS TO STOP WORK ON PUSHBUTTON LOCATIONS UNTIL A DESIGN WAIVER IS OBTAINED, APPROVED BY THE DIRECTOR, OFFICE OF TRAFFIC AND SAFETY.
3. PUSHBUTTONS ARE TO BE LOCATED SO THAT THEY CAN BE ACTIVATED BY A PERSON IN A WHEELCHAIR REACHING LESS THAN 18 IN. FROM A 60 IN. BY 60 IN. LEVEL LANDING AREA WITH A CROSS SLOPE OF LESS THAN OR EQUAL TO 2%.
4. THE 10 FT. SEPARATION BETWEEN PUSHBUTTONS IS TO BE MEASURED FROM FACE OF PUSHBUTTON TO FACE OF PUSHBUTTON. NOT CENTER OF POLE TO CENTER OF POLE.
5. PUSHBUTTON ARROWS AND SIGNS ARE TO BE ORIENTED PARALLEL TO THE CROSSING FOR WHICH THEY ARE INTENDED.

SPECIFICATION 817	CATEGORY CODE ITEMS
APPROVED	DIRECTOR - OFFICE OF TRAFFIC AND SAFETY

APPROVAL SHA REVISIONS		APPROVAL FEDERAL HIGHWAY ADMINISTRATION	
APPROVAL	10-10-00	APPROVAL	2-1-01
REVISED	5-17-07	REVISED	5-2-07
REVISED	4-16-19	REVISED	3-25-19
REVISED		REVISED	

MARYLAND DEPARTMENT OF TRANSPORTATION
STATE HIGHWAY ADMINISTRATION

STANDARDS FOR HIGHWAYS AND INCIDENTAL STRUCTURES

PEDESTRIAN PUSH BUTTON ASSEMBLY

STANDARD NO. MD 817.02

NO.	REVISION DESCRIPTION	BY	DATE

DESIGNED BY: PJM
DRAWN BY: GLJ
CHECKED BY: PJM
DATE: 09-15-22

WASHINGTON COUNTY, MARYLAND
DIVISION OF ENGINEERING

Washington County Administrative Annex, Building
747 Northern Avenue, Hagerstown, Maryland, 21742
Phone: 240-313-2460 Fax: 240-313-2401

INTERSECTION SIGNAL & SIDEWALK IMPROVEMENTS
STOTLER RD. & HALFWAY BLVD.
SIGNAL DETAILS

STATE OF MARYLAND
PAMELA JEAN KOHN
No. 39352
PROFESSIONAL ENGINEER
10.7.22

SCALE 1" = 30'
SECTION NO. SG - 03
SHEET NO. 22 OF 48
PROJECT NO. 16-045

K:\CADD\28-281 STOTLER ROAD ADA SIDEWALK\CONSTRUCTION\13 SG - SIGNAL PLANS\13 SG - SIGNAL DETAILS.DWG Last Saved: 9/29/2022 10:26 AM

K:\CADD\28-281 STOTLER ROAD ADA SIDEWALK\CONSTRUCTION\13 SG - SIGNAL PLANS\13 SG - SIGNAL DETAILS.DWG Last Saved: 9/29/2022 10:26 AM

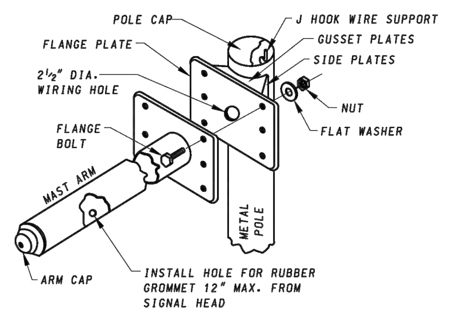

50' – 75' MAST ARMS

ARM AND SIGNAL ATTACHMENT

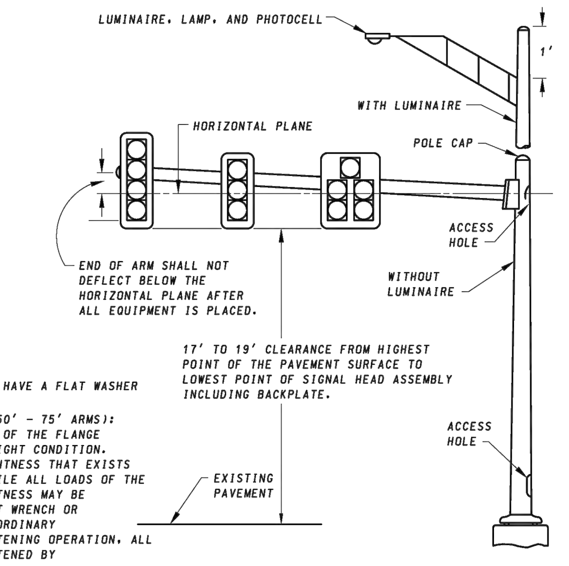

NOTES:

1. ALL HIGH STRENGTH (A 325) BOLTS SHALL HAVE A FLAT WASHER UNDER THE ELEMENT TO BE TURNED.
2. FLANGE BOLT TORQUE REQUIREMENTS (FOR 50' - 75' ARMS): BOLTS SHALL BE INSTALLED IN ALL HOLES OF THE FLANGE CONNECTION AND BROUGHT UP TO A SNUG TIGHT CONDITION. SNUG TIGHTENING IS DEFINED AS THE TIGHTNESS THAT EXISTS WHEN THE PLIES ARE IN FIRM CONTACT WHILE ALL LOADS OF THE ARM ARE BEING RELEASED. ADEQUATE TIGHTNESS MAY BE OBTAINED BY A FEW IMPACTS OF AN IMPACT WRENCH OR THE FULL EFFORT OF A PERSON USING AN ORDINARY SPUD WRENCH. FOLLOWING THIS SNUG TIGHTENING OPERATION, ALL BOLTS IN THE CONNECTION SHALL BE TIGHTENED BY HALF (1/2) TURN (± 30°).

MAST ARM AND COMBINATION LUMINAIRE MAST ARM POLE

SPECIFICATION 818	CATEGORY CODE ITEMS	MDOT MARYLAND DEPARTMENT OF TRANSPORTATION STATE HIGHWAY ADMINISTRATION
APPROVED	DIRECTOR - OFFICE OF TRAFFIC AND SAFETY	STANDARDS FOR HIGHWAYS AND INCIDENTAL STRUCTURES
APPROVAL SHA REVISIONS	APPROVAL FEDERAL HIGHWAY ADMINISTRATION	**MAST ARM POLE DETAILS**
APPROVAL 7-1-94	APPROVAL 7-1-94	
REVISED 10-1-01	REVISED 2-1-01	
REVISED 11-20-19	REVISED 9-4-19	
REVISED	REVISED	STANDARD NO. MD 818.02

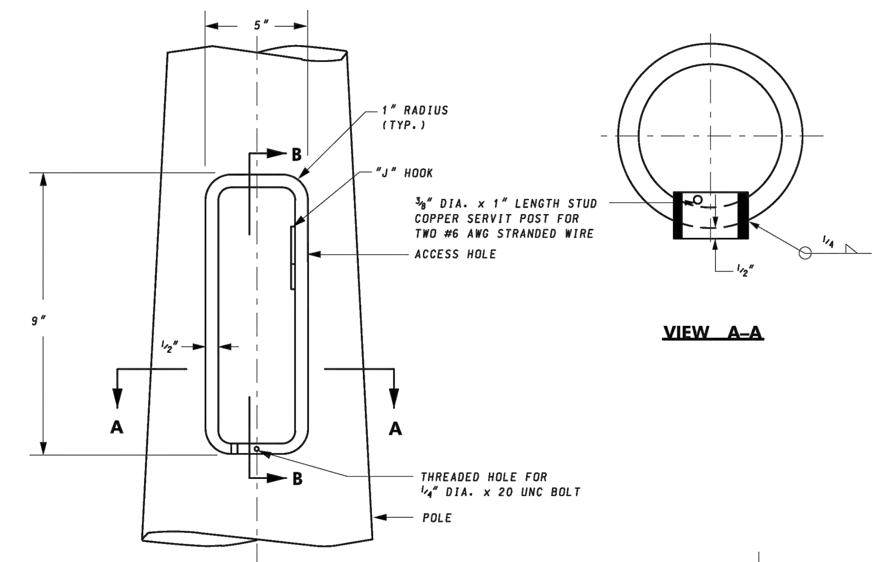

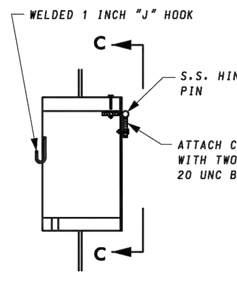

NOTES:

1. ACCESS HOLE COVER SHALL PROTRUDE OVERALL OPENING BY ¼" ± ON EACH SIDE.
2. ATTACH ACCESS HOLE COVER HINGE TO FRAME WITH TWO (2) S.S. ¼" DIA. x 20 UNC BOLTS TAPPED INTO ACCESS HOLE FRAME.
3. STEEL "J" HOOK SHALL BE PROVIDED AT UPPER ACCESS HOLES ONLY.

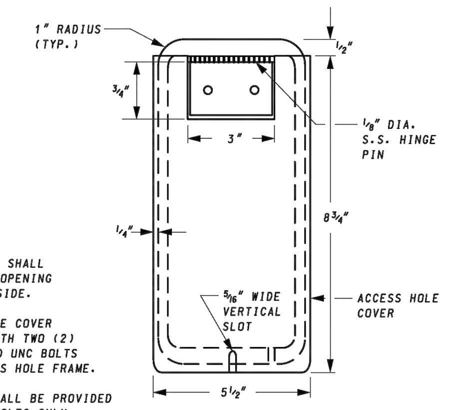

SPECIFICATION 818	CATEGORY CODE ITEMS	MDOT MARYLAND DEPARTMENT OF TRANSPORTATION STATE HIGHWAY ADMINISTRATION
APPROVED	DIRECTOR - OFFICE OF TRAFFIC AND SAFETY	STANDARDS FOR HIGHWAYS AND INCIDENTAL STRUCTURES
APPROVAL SHA REVISIONS	APPROVAL FEDERAL HIGHWAY ADMINISTRATION	**ACCESS HOLE FOR TRAFFIC SIGNAL AND SIGN STRUCTURES**
APPROVAL 7-1-94	APPROVAL 7-1-94	
REVISED 5-17-07	REVISED 5-2-07	
REVISED 11-20-19	REVISED 9-4-19	
REVISED	REVISED	STANDARD NO. MD 818.11

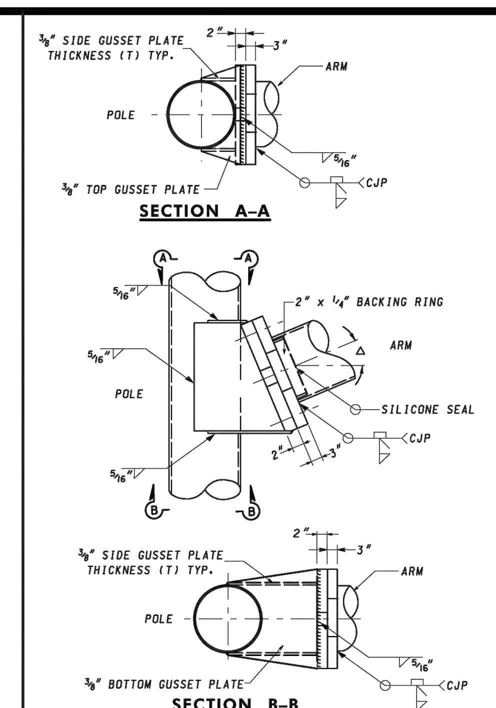

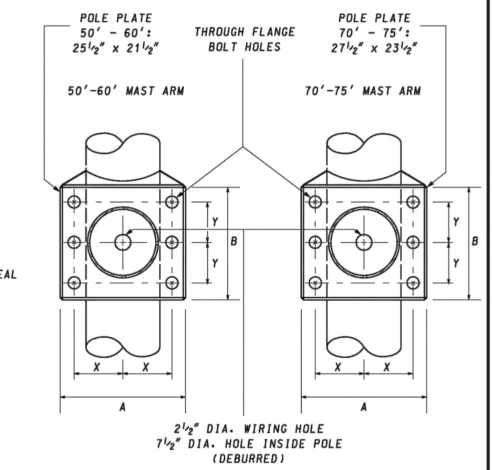

NOTES:

1. MAST ARMS SHALL HAVE A Δ = 4° RISE.
2. CURVED MAST ARMS SHALL HAVE A Δ = 15° RISE.
3. ARM PLATE AND POLE PLATE MATING SURFACES SHALL BE IN THE SAME PLANE TO WITHIN 1/16".
4. ALL BOLTS WITH DIAMETER GREATER OR EQUAL TO 1¾" SHOULD BE ASTM A490
5. FOR TRIPLE MAST ARMS, BOTTOM MAST ARM SHALL HAVE A Δ = 4° RISE AND UPPER MAST ARMS SHALL HAVE A Δ = 3° RISE.

ARM SIZE (THICKNESS x BUTT DIAMETER)	X	Y	A	B	FLANGE BOLTS (ALL BOLTS SHALL HAVE A CLASS OF FIT RATING OF 2A/2B UNC.)
ZERO (0) GAUGE - 14.5" DIA.	10"	8"	25½"	21½"	1¾" DIA. x 7½" LENGTH 6 THREADS / IN. WITH HEX NUT AND FLAT WASHER
ZERO (0) GAUGE - 16" DIA.	11"	9"	27½"	23½"	2" DIA. x 8" LENGTH 4½ THREADS / IN. WITH HEX NUT AND FLAT WASHER

SPECIFICATION 818	CATEGORY CODE ITEMS	MDOT MARYLAND DEPARTMENT OF TRANSPORTATION STATE HIGHWAY ADMINISTRATION
APPROVED	DIRECTOR - OFFICE OF TRAFFIC AND SAFETY	STANDARDS FOR HIGHWAYS AND INCIDENTAL STRUCTURES
APPROVAL SHA REVISIONS	APPROVAL FEDERAL HIGHWAY ADMINISTRATION	**MAST ARM FLANGE PLATES**
APPROVAL 7-1-94	APPROVAL 7-1-94	
REVISED 5-17-07	REVISED 5-2-07	
REVISED 11-20-19	REVISED 9-4-19	
REVISED	REVISED	STANDARD NO. MD 818.12

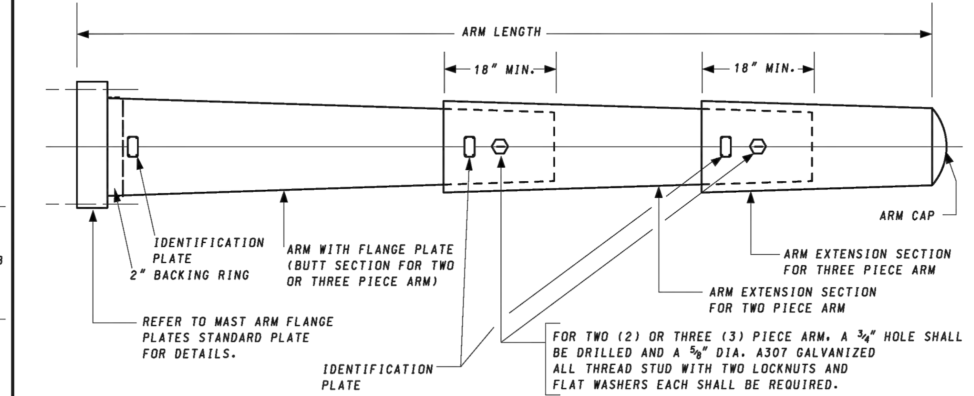

NOTES:

1. FOR A SINGLE PIECE ARM, DELETE ALL INFORMATION PERTAINING TO A TWO OR THREE PIECE ARM.
2. ARM LENGTHS 50' OR LONGER SHALL BE OF BUTT SECTION AND EXTENSION SECTION DESIGN.
3. ALL HOLES LOCATED IN THE EXTENSION SECTION(S) AND THE FLANGE PLATE MUST BE DRILLED BEFORE GALVANIZING.
4. NO HOLES SHALL BE DRILLED IN THE BUTT SECTION OF TWO OR THREE PIECE ARMS AT THE TIME OF FABRICATION.
5. SPLICE STUDS SHALL NOT BE CUT IN THE FIELD.

ARM LENGTH	ARM LENGTH (WALL THICKNESS x O.D. AT FLANGE x O.D. AT ARM END x SECTION LENGTH)
50'-0"	(BUTT) ZERO (0) x 14.50" x 8.90" x 40'-0" (EXT. 1) THREE (3) GAUGE x 9.51" x 7.90" x 11'-6"
60'-0"	(BUTT) ZERO (0) x 14.50" x 8.90" x 40'-0" (EXT. 1) THREE (3) GAUGE x 9.51" x 7.90" x 11'-6" (EXT. 2) SEVEN (7) GAUGE x 8.51" x 6.90" x 11'-6"
70'-0"	(BUTT) ZERO (0) x 16" x 11.10" x 35'-0" (EXT. 1) THREE (3) GAUGE x 11.71" x 8.00" x 26'-6" (EXT. 2) SEVEN (7) GAUGE x 8.61" x 7.00" x 11'-6"
75'-0"	(BUTT) ZERO (0) x 16" x 11.10" x 35'-0" (EXT. 1) THREE (3) GAUGE x 11.71" x 8.00" x 26'-6" (EXT. 2) SEVEN (7) GAUGE x 8.61" x 6.30" x 16'-6"

SPECIFICATION 818	CATEGORY CODE ITEMS	MDOT MARYLAND DEPARTMENT OF TRANSPORTATION STATE HIGHWAY ADMINISTRATION
APPROVED	DIRECTOR - OFFICE OF TRAFFIC AND SAFETY	STANDARDS FOR HIGHWAYS AND INCIDENTAL STRUCTURES
APPROVAL SHA REVISIONS	APPROVAL FEDERAL HIGHWAY ADMINISTRATION	**MAST ARMS**
APPROVAL 7-1-94	APPROVAL 7-1-94	
REVISED 5-17-07	REVISED 5-2-07	
REVISED 11-20-19	REVISED 9-4-19	
REVISED	REVISED	STANDARD NO. MD 818.13

NOT TO SCALE

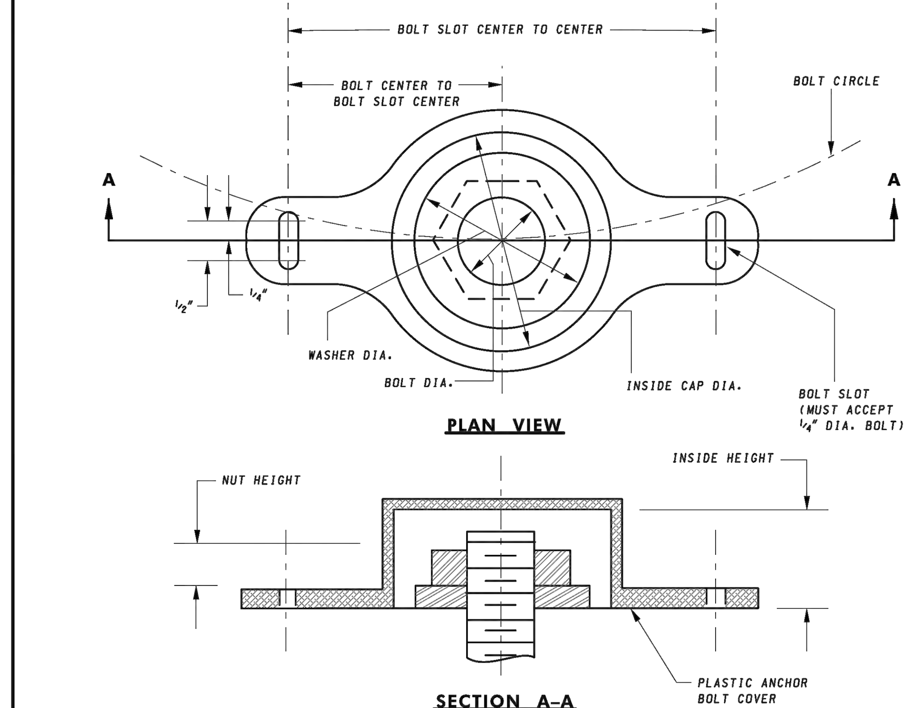

BOLT DIAMETER	WASHER DIAMETER	INSIDE CAP DIAMETER	NUT HEIGHT	INSIDE HEIGHT	BOLT CENTER TO BOLT SLOT	BOLT SLOT TO BOLT SLOT
1¾"	4"	4½"	1¾"	3"	3¼"	6½"
2"	4½"	5"	2"	3½"	3½"	7"
2¼"	4¾"	5¼"	2¼"	3½"	3⅝"	7¼"

NOTE:

SIDE OF COVER NEAREST POLE SHALL BE REMOVED TO CLEAR POLE DIAMETER.

SPECIFICATION 818	CATEGORY CODE ITEMS	MDOT MARYLAND DEPARTMENT OF TRANSPORTATION STATE HIGHWAY ADMINISTRATION
APPROVED	DIRECTOR - OFFICE OF TRAFFIC AND SAFETY	STANDARDS FOR HIGHWAYS AND INCIDENTAL STRUCTURES
APPROVAL SHA REVISIONS	APPROVAL FEDERAL HIGHWAY ADMINISTRATION	**ANCHOR BOLT COVER**
APPROVAL 7-1-94	APPROVAL 7-1-94	
REVISED 5-17-07	REVISED 5-2-07	
REVISED 11-20-19	REVISED 9-4-19	
REVISED	REVISED	STANDARD NO. MD 818.14

NOT TO SCALE

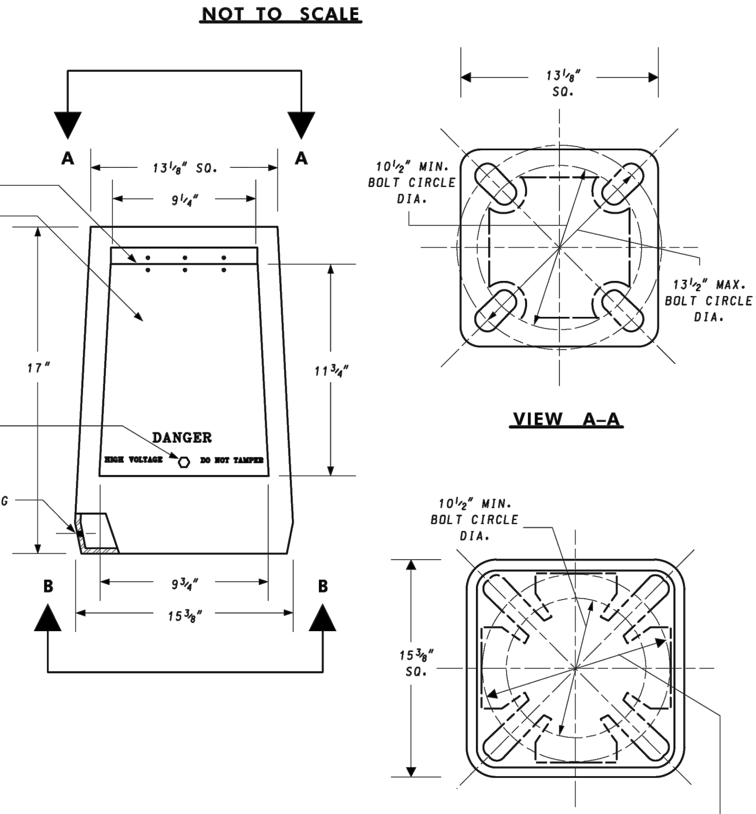

NOTES:

1. ALL BREAKAWAY TRANSFORMER BASES SHALL BE CERTIFIED BY FHWA AS MEETING THE CRASHWORTHINESS CRITERIA OF NCHRP REPORT 350.
2. TOP AND BOTTOM BOLT HOLES WILL ACCOMMODATE A MAXIMUM 1" DIAMETER BOLT.
3. THE CONTACT AREA OF THE TRANSFORMER BASE AGAINST THE CONCRETE FOUNDATION SHALL BE SHOP COATED WITH COAL TAR EPOXY BITUMASTIC 300M OR EQUAL MEETING SSPC - PAINT 16 SPECIFICATIONS. THE THICKNESS OF THE COATING SHALL BE BETWEEN 6 AND 8 MILS. THE COATING SHALL BE COMPLETELY DRY BEFORE SHIPMENT.

SPECIFICATION 818	CATEGORY CODE ITEMS	Maryland Department of Transportation STATE HIGHWAY ADMINISTRATION
APPROVED	DIRECTOR – OFFICE OF TRAFFIC AND SAFETY	STANDARDS FOR HIGHWAYS AND INCIDENTAL STRUCTURES
APPROVAL • SHA REVISIONS	APPROVAL • FEDERAL HIGHWAY ADMINISTRATION	**BREAKAWAY TRANSFORMER BASE FOR 10', 14' AND 20' PEDESTAL POLES**
APPROVAL 7-1-94	APPROVAL 7-1-94	
REVISED 5-17-07	REVISED 5-2-07	
REVISED	REVISED	
REVISED	REVISED	STANDARD NO. MD 821.01-01

REFERENCED ON: MD 821.01

NOTES: (UNLESS OTHERWISE SPECIFIED)

ALL WELDS EXPOSED TO THE ENVIROMENT SHALL BE CONTINUOSLY WELDER OR OVERLAPPED BY 1/8"; NO GAPS ALLOWED.

NOTA: (A MENOS QUE SE ESPECIFIQUE LO CONTRARIO)

TODAS LAS SOLDADURAS ESPUESTAS AL MEDIO AMBIENTE DEBEN SER SOLDADAS CONTINUOAMENTE O SOBREPONERSE ENTRE SI CON UNA CAPA DE UN 1/8 " . NO SE PERMITEN ESPACIOS.

REVISIONS				
REV.	BY	E.C.O. NUMBER	DATE	APPRD
-	BM	CREATED FOR CDOT 333SD PER ECR 10025	10/15/98	
A	BM	RE-DRAWN IN NEW FORMAT	10/27/00	
B	BM	ADDED NOTATION FOR GRINDING WELDS ON TOP ANT BTM. SURFACES. GAPS OCCURING BETWEEN BASE & CAB .	12/10/03	
C	BM	REVISED PER ECO 5307S; ADDED DEBURR NOTE	6/17/11	H.J
D	MJ	ECO27424 ADDED 8 OBROUND AND RE-DRAWN IN NEW FORMAT	2/25/16	D.E.

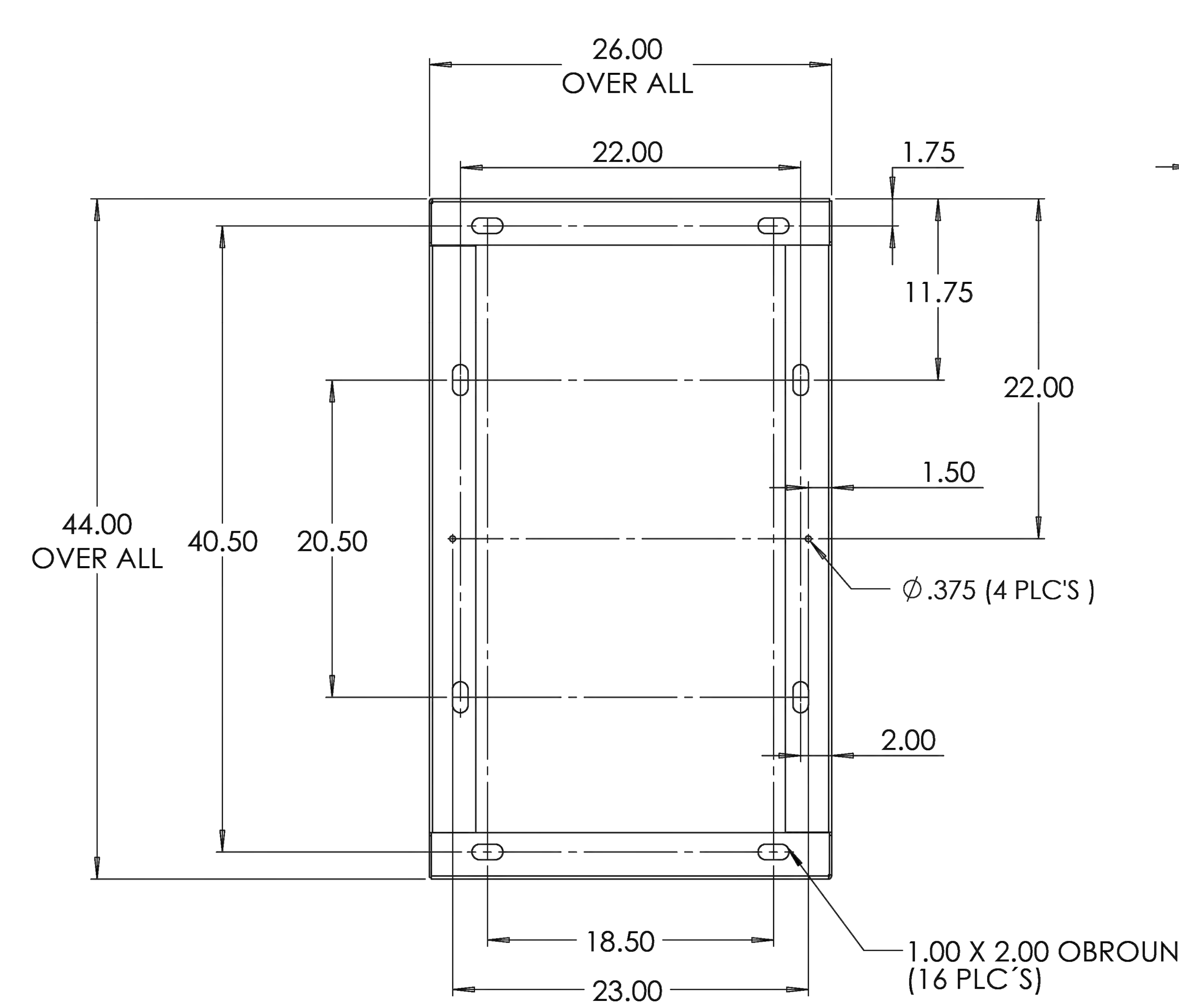

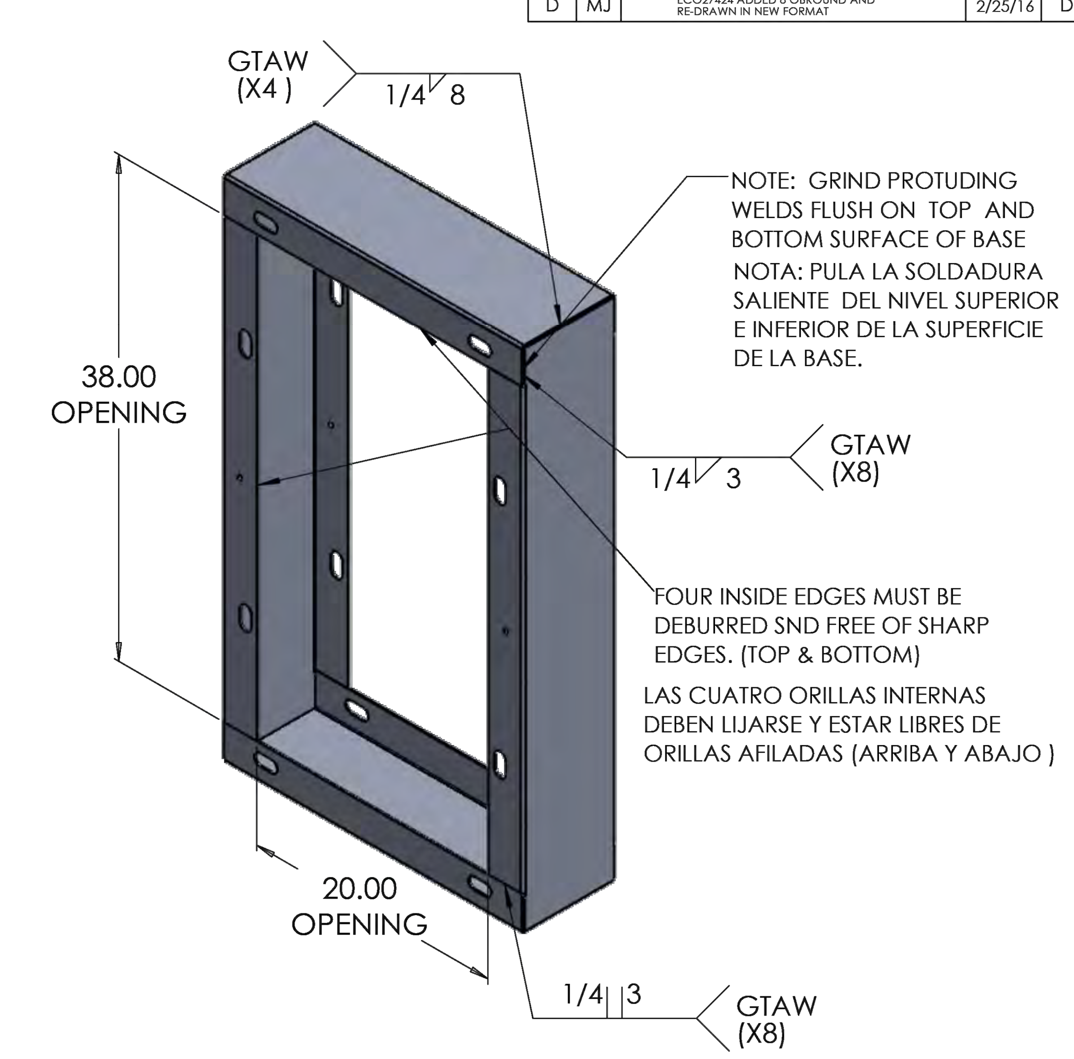

ABOVE PATTTER TYPICAL TOP & BOTTOM
PART IS SYMMETRICAL
WELD TOLERANCE +/- 1/8"

ARRIBA EL DISEÑO TIPICO SUPERIOR E INFERIOR
LA PARTE ES SIMETRICA
LA TOLERANCIA DE SOLDADURA +/- 1/8"

MODEL FILE: 025557D.SLDPRT

UNLESS OTHERWISE SPECIFIED
DIMENSIONS ARE IN INCHES
DEBURR AND BREAK ALL SHARP EDGES
PART MUST BE FREE OF ANY FOREIGN CONTAMINANTS

TOLERANCE
DECIMAL: X ± .05; XX ± .03; XXX ± .015
ANGULAR: ± 0°30'
HOLES: UNDER 1" = +.003 / -.003

This drawing is the property of ECONOLITE CONTROL PRODUCTS who claims proprietary rights in the material disclosed. It is issued in confidence for engineering information only and may not be copied or used for manufacture on anything shown without specific written permission from ECONOLITE CONTROL PRODUCTS.

DO NOT SCALE DRAWING

DRAWN	M. JIMENEZ	2/25/2016
DESIGN	B. McLEOD	10/15/98
CHECK	D. ELIZALDE	2/25/2016
ENGINEER	M. JIMENEZ	2/25/2016
APPRD	D. ELIZALDE	2/25/2016
MATERIAL		
FINISH	NATURAL	

ECONOLITE
3360 E. La PALMA, ANAHEIM, CA. 92806

TITLE: **333SD BASE WELDMENT (RISER)**

SIZE	CAGE CODE	DRAWING NO.	REV.
B	0FEW7	025557D333-00	D
SCALE: 1:10		CAD FILE: 025557Dd.SLDDRW	Sheet 1 OF 1

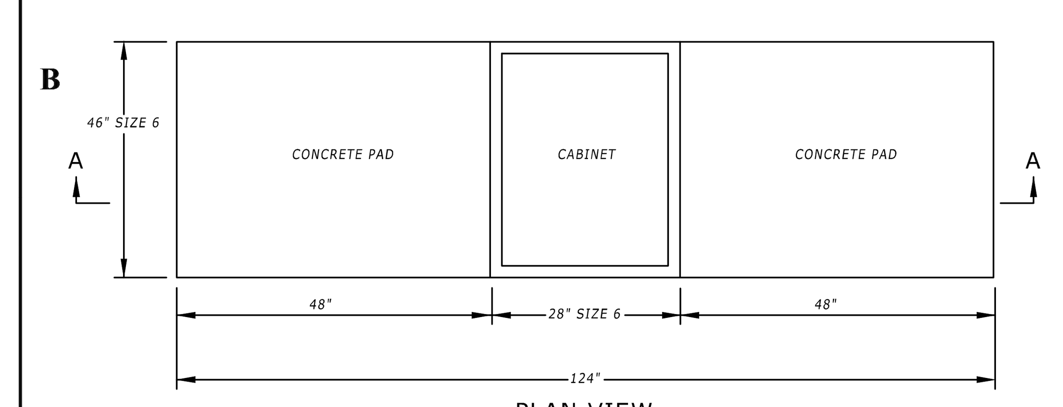

CABINET SIZE	CONCRETE (C.Y.)
S-CABINET STCAB1509 WITH 4 DOORS	1.5

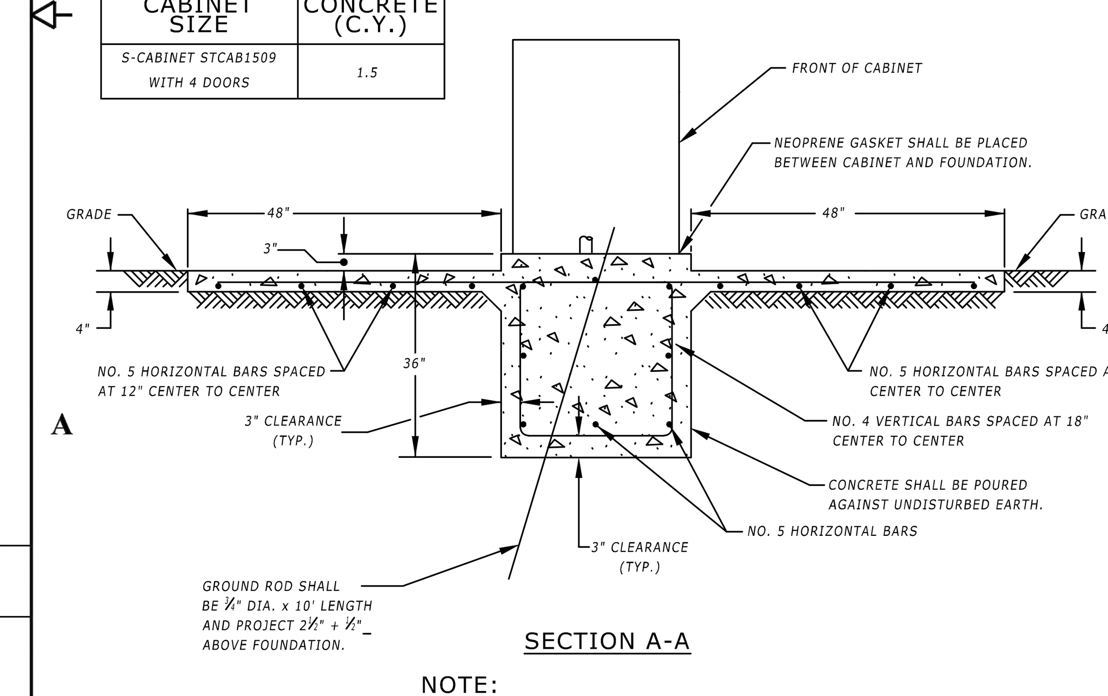

SECTION A-A

NOTE:

IF CABINET DOOR FACES EXISTING OR PROPOSED SIDEWALK AREA, DELETE STANDING PAD PORTION OF FOUNDATION.

FOUNDATION DETAILS FOR
BASE MOUNTED
S-CABINET STCAB1509 WITH 4 DOORS
SCALE: NONE

NO.	REVISION DESCRIPTION	BY	DATE

DESIGNED BY: PJM
DRAWN BY: GLJ
CHECKED BY: PJM
DATE: 09-15-22

WASHINGTON COUNTY, MARYLAND
DIVISION OF ENGINEERING

Washington County Administrative Annex. Building
747 Northern Avenue, Hagerstown, Maryland, 21742
Phone: 240-313-2460 Fax: 240-313-2401

INTERSECTION SIGNAL &
SIDEWALK IMPROVEMENTS
STOTLER RD. & HALFWAY BLVD.
SIGNAL DETAILS

STATE OF MARYLAND PAMELA JEAN MOHN No. 39252 PROFESSIONAL ENGINEER 10.7.22

SCALE 1" = 30'

SECTION NO. SG - 04

SHEET NO. 23 OF 48

PROJECT NO. 16-045

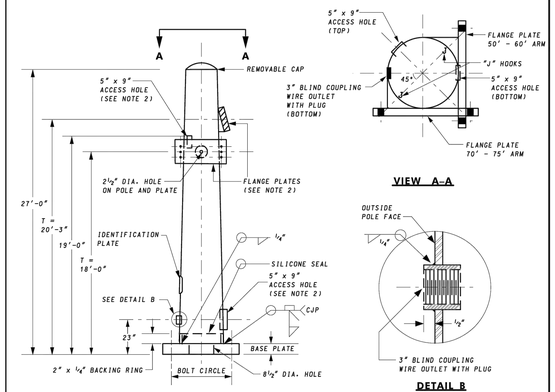

POLE SIZE (WALL THICKNESS x O.D. AT BASE OF PLATE x O.D. AT POLE TOP x POLE HEIGHT)	ARM SIZE (FLANGE PLATE SHALL ACCEPT ANY MAST ARM LISTED WITH THE FOLLOWING INCLUSIVE LENGTHS.) (SEE NOTE 2)	ANCHOR BOLTS (ALL BOLTS SHALL HAVE A CLASS OF FIT RATING OF 2A/2B UNC.)	BASE PLATE (DIA. x PLATE THICKNESS)	BOLT CIRCLE (DIA.)
0 GAUGE x 18.5" x 14.72" x 27'	50' - 60' FLANGE: 50' - 60' 70' - 75' FLANGE: 70' - 75'	SIX (6) 2" DIA. X 72" LENGTH 4½ THREADS PER IN.	31½" X 2½"	23½"

NOTES:

1. ALL ANCHOR BOLT HOLE DIAMETERS SHALL BE ¼" LARGER THAN THE ANCHOR BOLT DIAMETER LISTED.
2. REFER TO MAST ARM FLANGE PLATE AND ACCESS HOLE STANDARD PLATES FOR DETAILS.

SPECIFICATION	CATEGORY CODE ITEMS
818	

APPROVED — DIRECTOR - OFFICE OF TRAFFIC AND SAFETY

APPROVAL SHA REVISIONS		APPROVAL FEDERAL HIGHWAY ADMINISTRATION	
APPROVAL	7-1-94	APPROVAL	7-1-94
REVISED	5-17-07	REVISED	5-2-07
REVISED	11-20-19	REVISED	9-4-19
REVISED		REVISED	

MDOT MARYLAND DEPARTMENT OF TRANSPORTATION
STATE HIGHWAY ADMINISTRATION

STANDARDS FOR HIGHWAYS AND INCIDENTAL STRUCTURES

REVERSE TWIN MAST ARM POLE WITH DIFFERENT FLANGE PLATES

STANDARD NO. MD 818.09

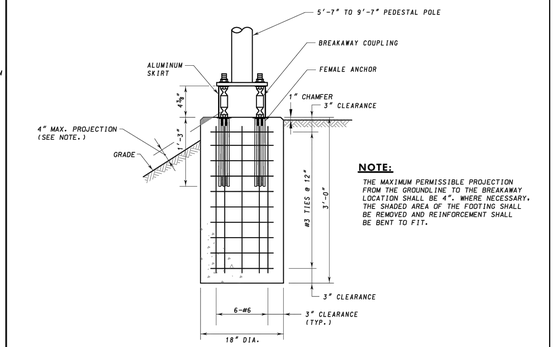

NOTE:

THE MAXIMUM PERMISSIBLE PROJECTION FROM THE GROUNDLINE TO THE BREAKAWAY LOCATION SHALL BE 4". WHERE NECESSARY, THE SHADED AREA OF THE FOOTING SHALL BE REMOVED AND REINFORCEMENT SHALL BE BENT TO FIT.

FOUNDATION DETAIL

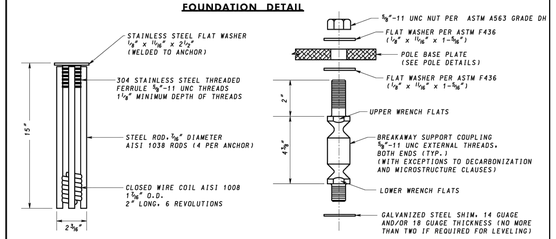

FEMALE ANCHOR DETAIL

BREAKAWAY COUPLING DETAIL

SPECIFICATION	CATEGORY CODE ITEMS
801	

APPROVED — DIRECTOR - OFFICE OF TRAFFIC AND SAFETY

APPROVAL SHA REVISIONS		APPROVAL FEDERAL HIGHWAY ADMINISTRATION	
APPROVAL	5-17-07	APPROVAL	5-2-07
REVISED	11-20-19	REVISED	9-4-19
REVISED		REVISED	
REVISED		REVISED	

MDOT MARYLAND DEPARTMENT OF TRANSPORTATION
STATE HIGHWAY ADMINISTRATION

STANDARDS FOR HIGHWAYS AND INCIDENTAL STRUCTURES

SIGNAL STRUCTURE FOUNDATIONS FOR PUSHBUTTON AND PEDESTRIAN SIGNAL POLE

STANDARD NO. MD 801.01-01

NOT TO SCALE

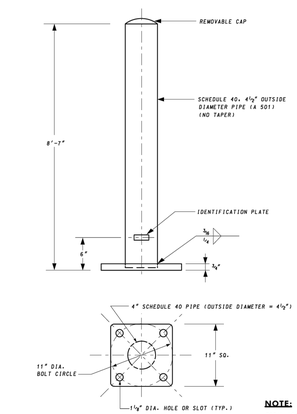

NOTE:

TOTAL 10' DIMENSION INCLUDES POLE HEIGHT AND TRANSFORMER BASE.

SPECIFICATION	CATEGORY CODE ITEMS
818	

APPROVED — DIRECTOR - OFFICE OF TRAFFIC AND SAFETY

APPROVAL SHA REVISIONS		APPROVAL FEDERAL HIGHWAY ADMINISTRATION	
APPROVAL	7-1-94	APPROVAL	7-1-94
REVISED	5-17-07	REVISED	5-2-07
REVISED		REVISED	
REVISED		REVISED	

Maryland Department of Transportation
STATE HIGHWAY ADMINISTRATION
STANDARDS FOR HIGHWAYS AND INCIDENTAL STRUCTURES

10' PEDESTAL POLE

STANDARD NO. MD 818.16

REFERENCED ON: MD 801.01

NOMINAL MOUNTING HEIGHT FT.	BRACKET ARM LENGTH FT.	ANCHOR BOLT DIMENSIONS (*) 8" x 36" IN. x IN.	FOUNDATION DIMENSIONS DIAMETER D FT.	FOUNDATION DIMENSIONS HEIGHT H FT.	FOUNDATION REINFORCEMENT VERTICAL REINF. BARS SIZE	FOUNDATION REINFORCEMENT HORIZONTAL REINF. SIZE	CONCRETE REQUIRED C.Y.
UP TO 15	0	**	2	4	6 NO.8	NO.3 TIES AT 1'-0" C.C.	0.5
16-30	0-15	1 x 36	2½	7	8 NO.8		1.3
	20-25	1 x 36	2½	11½	8 NO.8		2.1
	30	1¼ x 42	2½	11½	8 NO.8		2.1
35-40	4-20	1 x 36	2½	11½	8 NO.8		2.1
	25-35	1¼ x 42	3	15	8 NO.10		4.0
45-50	0-10	1 x 36	2½	11½	8 NO.8		2.1
	15-30	1¼ x 42	3	15	8 NO.10		4.0

** VARY PER MANUFACTURER'S RECOMMENDATION

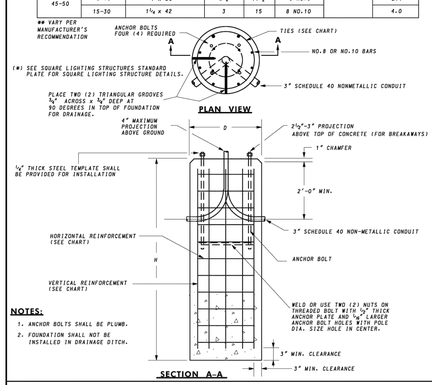

SPECIFICATION	CATEGORY CODE ITEMS
801	

APPROVED — DIRECTOR - OFFICE OF TRAFFIC AND SAFETY

APPROVAL SHA REVISIONS		APPROVAL FEDERAL HIGHWAY ADMINISTRATION	
APPROVAL	7-1-94	APPROVAL	7-1-94
REVISED	5-17-07	REVISED	5-2-07
REVISED	4-16-19	REVISED	2-10-20
REVISED		REVISED	

MDOT MARYLAND DEPARTMENT OF TRANSPORTATION
STATE HIGHWAY ADMINISTRATION

STANDARDS FOR HIGHWAYS AND INCIDENTAL STRUCTURES

LIGHTING STRUCTURE FOUNDATION

STANDARD NO. MD 801.02

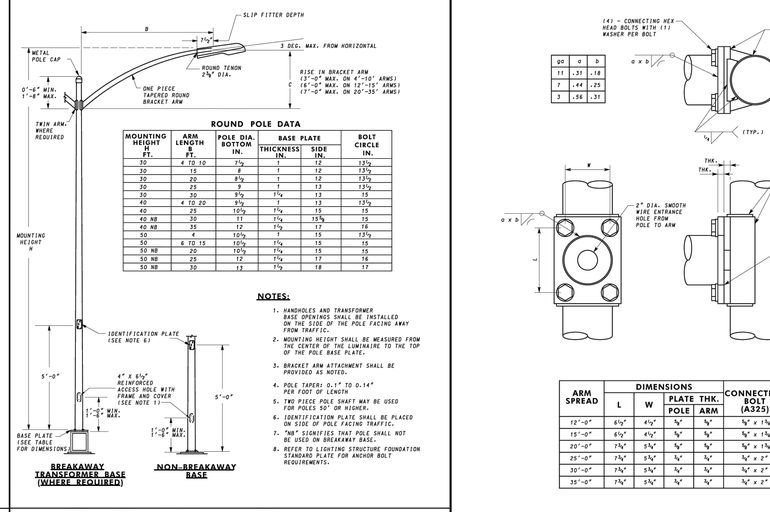

ROUND POLE DATA

MOUNTING HEIGHT H FT.	ARM LENGTH B FT.	POLE DIA. BOTTOM IN.	BASE PLATE THICKNESS IN.	BASE PLATE SIDE IN.	BOLT CIRCLE IN.
30	4 TO 10	7½	1	12	13½
30	15	8	1	12	13½
30	20	8½	1	12	13½
30	25	9	1	13	13½
30	30	9½	1¼	13	15
40	4 TO 20	9½	1	13	13½
40	25	10½	1¼	15	15
40 NB	30	11	1¼	15⅝	15
40 NB	35	12	1½	17	16
50	4	10½	1	15	13½
50	6 TO 15	10½	1¼	15	15
50 NB	20	10½	1¼	15	15
50 NB	25	12	1½	17	16
50 NB	30	13	1½	18	17

NOTES:

1. HANDHOLES AND TRANSFORMER BASE OPENINGS SHALL BE INSTALLED ON THE SIDE OF THE POLE FACING AWAY FROM TRAFFIC.
2. MOUNTING HEIGHT SHALL BE MEASURED FROM THE CENTER OF THE LUMINAIRE TO THE TOP OF THE POLE BASE PLATE.
3. BRACKET ARM ATTACHMENT SHALL BE PROVIDED AS NOTED.
4. POLE TAPERS: 0.1" TO 0.14" PER FOOT OF LENGTH
5. TWO PIECE POLE SHAFT MAY BE USED FOR POLES 50' OR HIGHER.
6. IDENTIFICATION PLATE SHALL BE PLACED ON SIDE OF POLE FACING TRAFFIC.
7. "NB" SIGNIFIES THAT POLE SHALL NOT BE USED ON BREAKAWAY BASE.
8. REFER TO LIGHTING STRUCTURE FOUNDATION STANDARD PLATE FOR ANCHOR BOLT REQUIREMENTS.

SPECIFICATION	CATEGORY CODE ITEMS
808	

APPROVED — DIRECTOR - OFFICE OF TRAFFIC AND SAFETY

APPROVAL SHA REVISIONS		APPROVAL FEDERAL HIGHWAY ADMINISTRATION	
APPROVAL	7-1-94	APPROVAL	7-1-94
REVISED	5-17-07	REVISED	5-2-07
REVISED	4-16-19	REVISED	4-1-19
REVISED		REVISED	

MDOT MARYLAND DEPARTMENT OF TRANSPORTATION
STATE HIGHWAY ADMINISTRATION

STANDARDS FOR HIGHWAYS AND INCIDENTAL STRUCTURES

LIGHTING STRUCTURE WITH BRACKET ARM

STANDARD NO. MD 808.01

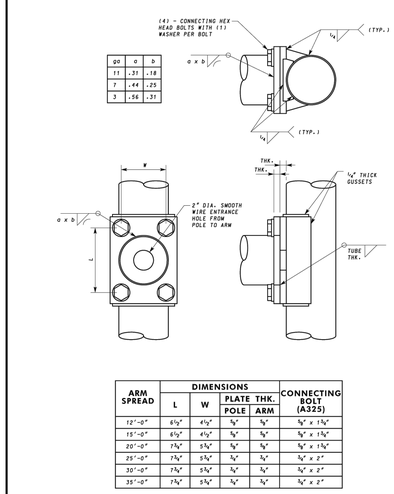

a	a	b
11	.31	.18
7	.44	.25
3	.56	.31

ARM SPREAD	DIMENSIONS L	DIMENSIONS W	PLATE THK. POLE	PLATE THK. ARM	CONNECTING BOLT (A325)
12'-0"	6½"	4½"	⅝"	⅝"	⅝" x 1⅝"
15'-0"	6½"	4½"	⅝"	⅝"	⅝" x 1⅝"
20'-0"	7¾"	5¾"	⅝"	⅝"	⅝" x 1⅝"
25'-0"	7¾"	5¾"	¾"	¾"	¾" x 2"
30'-0"	7¾"	5¾"	¾"	¾"	¾" x 2"
35'-0"	7¾"	5¾"	¾"	¾"	¾" x 2"

SPECIFICATION	CATEGORY CODE ITEMS
808	

APPROVED — DIRECTOR - OFFICE OF TRAFFIC AND SAFETY

APPROVAL SHA REVISIONS		APPROVAL FEDERAL HIGHWAY ADMINISTRATION	
APPROVAL	5-17-07	APPROVAL	5-2-07
REVISED		REVISED	
REVISED		REVISED	
REVISED		REVISED	

Maryland Department of Transportation
STATE HIGHWAY ADMINISTRATION
STANDARDS FOR HIGHWAYS AND INCIDENTAL STRUCTURES

12' - 35' BRACKET ARM CONNECTION DETAIL

STANDARD NO. MD 808.01-01

POLE TYPE	ARM LENGTH OR POLE SIZE	BOLT SIZE (DIA.) (IN.)	ANCHOR BOLT SIZE (NO.-DIA.-IN.x(IN.)	ANCHOR BOLT PROJECTION ABOVE FOUNDATION MAX (IN.)	FOUNDATION REINFORCEMENT DIAMETER D	DEPTH H IN GROUND	VERTICAL REINFORCEMENT	HORIZONTAL REINFORCEMENT	CONCRETE REQUIRED C.Y.
BREAKAWAY PEDESTAL	6'- 10'	8	REFER TO MD.801.01-01	FEMALE ANCHOR FOR COUPLING	1'-6"	3'-0"	6 NO.6	NO.3@12"C.C.	0.2
PEDESTAL BREAKAWAY	10'.1 14'/ 20'	11	4 - 1 x 36	3¼	2'-0"	6'-0"	6 NO.8	NO.3@12"C.C.	0.7
STRAIN	12" x 30'	16	4 - 1⅛ x 66	7½	3'-0"	10'-0"	8 NO.10	NO.4@12"C.C.	2.7
	12" x 32'	22	4 - 2¼ x 72	8½	4'-0"	10'-0"	16 NO.10	NO.4@12"C.C.	4.7
	14" x 32'	22	4 - 2¼ x 72	8½	4'-0"	10'-0"	16 NO.10	NO.4@12"C.C.	4.7
MAST ARM	50'-60' SINGLE	22	6 - 2 x 72	9	4'-0"	10'-0"	16 NO.10	NO.4@12"C.C.	4.7
	50'-60',50'-60' TWIN	22	6 - 2 x 72	9	4'-0"	10'-0"	16 NO.10	NO.4@12"C.C.	4.7
	70'-75' SINGLE	23½	6 - 2 x 72	9	4'-0"	10'-0"	16 NO.10	NO.4@12"C.C.	4.7
	50'-60',70'-75' TWIN	23½	6 - 2 x 72	9	4'-0"	10'-0"	16 NO.10	NO.4@12"C.C.	4.7
	50',50'-60',70'-75' TRIPLE	23½	6 - 2 x 72	9	4'-0"	10'-0"	16 NO.10	NO.4@12"C.C.	4.7

NOTES:

1. MAST ARM POLE FOUNDATIONS SHALL PROJECT ABOVE GRADE TO PROVIDE MAST ARM TO ROADWAY CLEARANCE OF 18' - 20' FULLY LOADED.
2. ALL EXPOSED FOUNDATION FACES SHALL BE FINISHED SMOOTH.
3. GROUT SHALL NOT BE INSTALLED BETWEEN THE BASE PLATE AND THE TOP OF THE FOUNDATION.
4. ¼" THICK STEEL TEMPLATE PLATE WITH ⅛" LARGER ANCHOR BOLT HOLE SHALL BE USED FOR INSTALLATION.
5. ANCHOR BOLTS SHALL BE PLUMB AND SHALL BE INSTALLED WITH MISALIGNMENT OF LESS THAN 1:40 FROM VERTICAL.

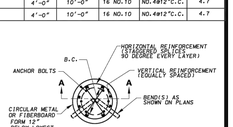

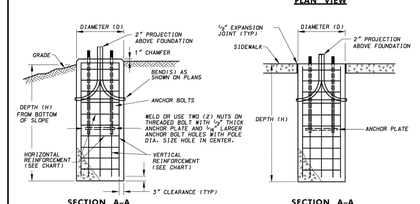

SPECIFICATION	CATEGORY CODE ITEMS
801	

APPROVED — DIRECTOR - OFFICE OF TRAFFIC AND SAFETY

APPROVAL SHA REVISIONS		APPROVAL FEDERAL HIGHWAY ADMINISTRATION	
APPROVAL	7-1-94	APPROVAL	7-1-94
REVISED	10-1-01	REVISED	2-1-01
REVISED	11-20-19	REVISED	9-4-19
REVISED		REVISED	

MDOT MARYLAND DEPARTMENT OF TRANSPORTATION
STATE HIGHWAY ADMINISTRATION

STANDARDS FOR HIGHWAYS AND INCIDENTAL STRUCTURES

SIGNAL STRUCTURE FOUNDATIONS

STANDARD NO. MD 801.01

NO.	REVISION DESCRIPTION	BY	DATE

DESIGNED BY: PJM
DRAWN BY: GLJ
CHECKED BY: PJM
DATE: 09-15-22

WASHINGTON COUNTY, MARYLAND
DIVISION OF ENGINEERING

Washington County Administrative Annex, Building
747 Northern Avenue, Hagerstown, Maryland, 21742
Phone: 240-313-2460 Fax: 240-313-2401

INTERSECTION SIGNAL & SIDEWALK IMPROVEMENTS
STOTLER RD. & HALFWAY BLVD.
SIGNAL DETAILS

STATE OF MARYLAND — PAMELA JEAN MOHN — No. 39257 — PROFESSIONAL ENGINEER
10.7.22

SCALE 1" = 30'
SECTION NO. SG - 05
SHEET NO. 24 OF 48
PROJECT NO. 16-045

K:\CADD\28-281 STOTLER ROAD ADA SIDEWALK\CONSTRUCTION\13 SG - SIGNAL PLANS\13 SG - SIGNAL DETAILS.DWG Last Saved: 9/29/2022 10:26 AM

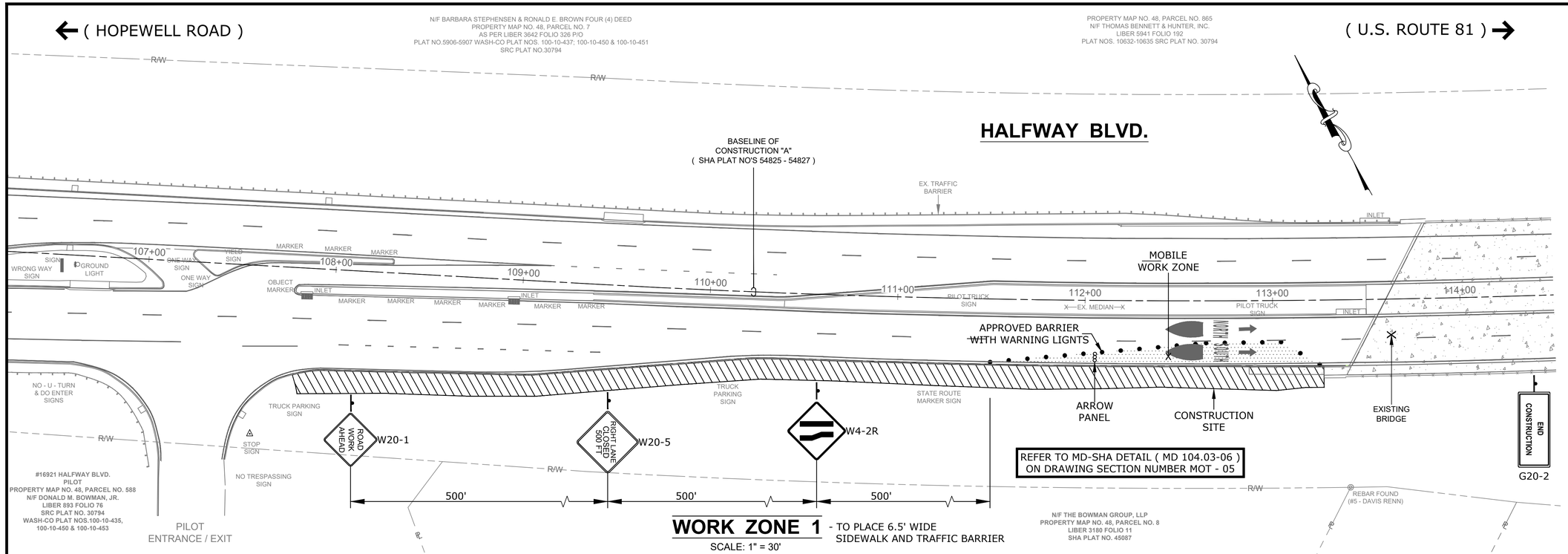

WORK ZONE 1 - TO PLACE 6.5' WIDE SIDEWALK AND TRAFFIC BARRIER

SCALE: 1" = 30'

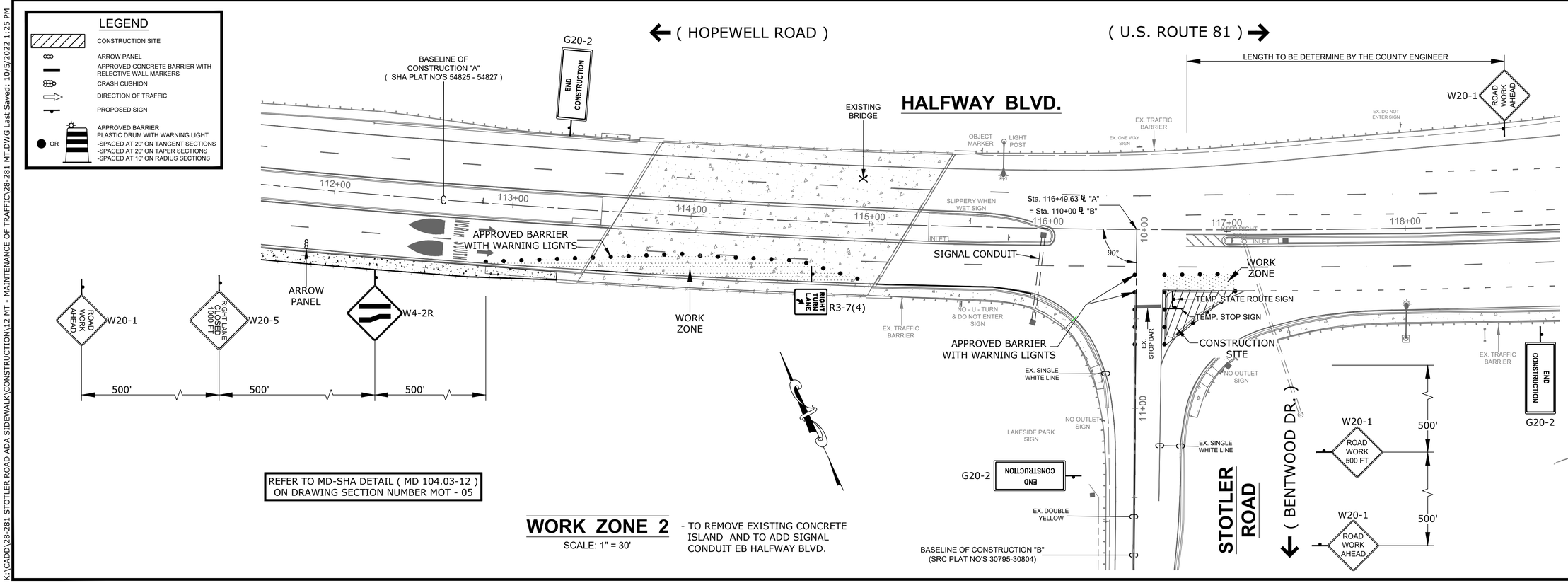

WORK ZONE 2 - TO REMOVE EXISTING CONCRETE ISLAND AND TO ADD SIGNAL CONDUIT EB HALFWAY BLVD.

SCALE: 1" = 30'

NO.	REVISION DESCRIPTION	BY	DATE

DESIGNED BY: PJM
DRAWN BY: GLJ
CHECKED BY: PJM
DATE: 09-15-22

WASHINGTON COUNTY, MARYLAND
DIVISION OF ENGINEERING

Washington County Administrative Annex, Building
747 Northern Avenue, Hagerstown, Maryland, 21742
Phone: 240-313-2460 Fax: 240-313-2401

INTERSECTION SIGNAL & SIDEWALK IMPROVEMENTS
STOTLER RD. & HALFWAY BLVD.
MOT - WORK ZONES 1 & 2

STATE OF MARYLAND
PAMELA JEAN WORN
No. 39251
PROFESSIONAL ENGINEER
10.7.22

SCALE
1" = 30'

SECTION NO.
MOT - 01

SHEET NO.
25 OF 48

PROJECT NO.
16-045

K:\CADD\28-281 STOTLER ROAD ADA SIDEWALK\CONSTRUCTION\12 MT - MAINTENANCE OF TRAFFIC\28-281 MT.DWG Last Saved: 10/5/2022 1:25 PM

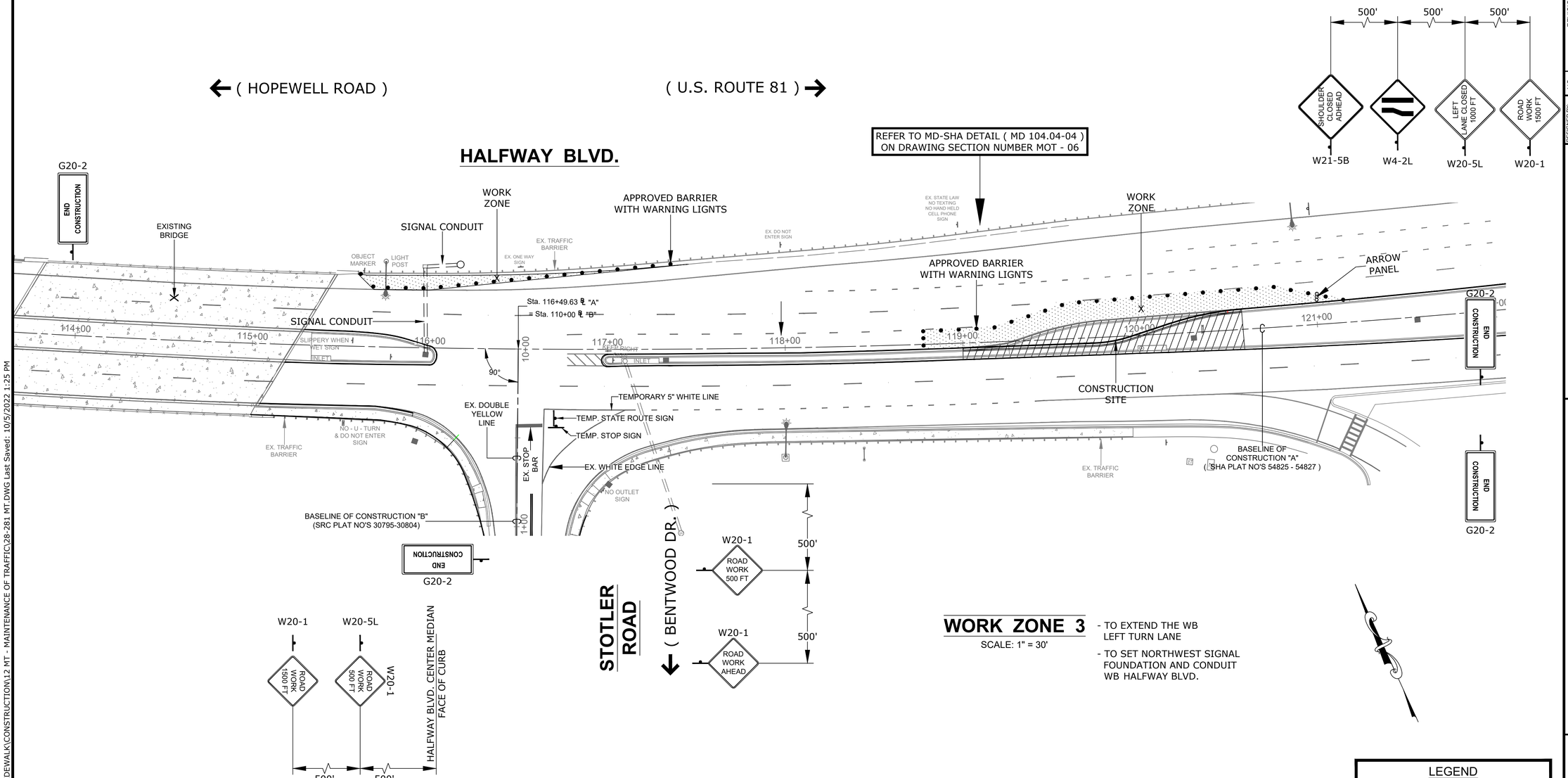

WORK ZONE 3

SCALE: 1" = 30'

- TO EXTEND THE WB LEFT TURN LANE
- TO SET NORTHWEST SIGNAL FOUNDATION AND CONDUIT WB HALFWAY BLVD.

LEGEND

- CONSTRUCTION SITE
- ARROW PANEL
- APPROVED CONCRETE BARRIER WITH RELECTIVE WALL MARKERS
- CRASH CUSHION
- DIRECTION OF TRAFFIC
- PROPOSED SIGN
- APPROVED BARRIER PLASTIC DRUM WITH WARNING LIGHT -SPACED AT 20' ON TANGENT SECTIONS -SPACED AT 20' ON TAPER SECTIONS -SPACED AT 10' ON RADIUS SECTIONS (OR)

NO.	REVISION DESCRIPTION	BY	DATE

DESIGNED BY: PJM
DRAWN BY: GLJ
CHECKED BY: PJM
DATE: 09-15-22

WASHINGTON COUNTY, MARYLAND
DIVISION OF ENGINEERING

Washington County Administrative Annex, Building
747 Northern Avenue, Hagerstown, Maryland, 21742
Phone: 240-313-2460 Fax: 240-313-2401

INTERSECTION SIGNAL& SIDEWALK IMPROVEMENTS
STOTLER RD. & HALFWAY BLVD.
MOT - WORK ZONE 3

STATE OF MARYLAND PAMELA JEAN MOORE No. 39257 PROFESSIONAL ENGINEER
10.7.22

SCALE 1" = 30'
SECTION NO. MOT -02
SHEET NO. 26 OF 48
PROJECT NO. 16-045

K:\CADD\28-281 STOTLER ROAD ADA SIDEWALK\CONSTRUCTION\12 MT - MAINTENANCE OF TRAFFIC\28-281 MT.DWG Last Saved: 10/5/2022 1:25 PM

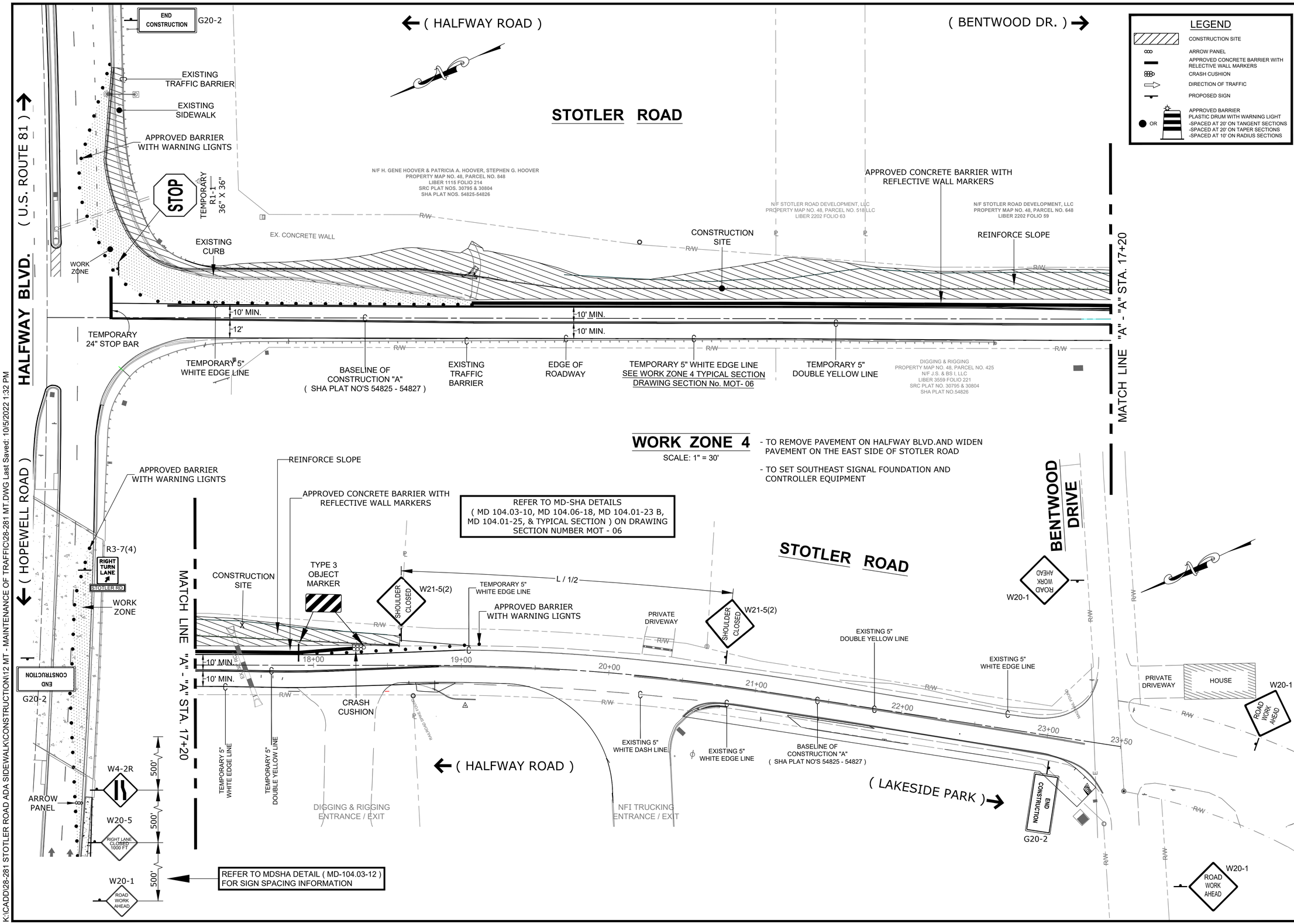

WORK ZONE 4

SCALE: 1" = 30'

- TO REMOVE PAVEMENT ON HALFWAY BLVD.AND WIDEN PAVEMENT ON THE EAST SIDE OF STOTLER ROAD
- TO SET SOUTHEAST SIGNAL FOUNDATION AND CONTROLLER EQUIPMENT

K:\CADD\28-281 STOTLER ROAD ADA SIDEWALK\CONSTRUCTION\12 MT - MAINTENANCE OF TRAFFIC\28-281 MT.DWG Last Saved: 10/5/2022 1:32 PM

NO.	REVISION DESCRIPTION	BY	DATE

DESIGNED BY: PJM
DRAWN BY: GLJ
CHECKED BY: PJM \ SH \ TP
DATE: 09-15-22

WASHINGTON COUNTY, MARYLAND
DIVISION OF ENGINEERING

Washington County Administrative Annex Building
747 Northern Avenue, Hagerstown, Maryland, 21742
Phone: 240-313-2460 Fax: 240-313-2401

INTERSECTION SIGNAL & SIDEWALK IMPROVEMENTS STOTLER RD. & HALFWAY BLVD. MOT - WORK ZONE 4

STATE OF MARYLAND
PAMELA JEAN NOHN
No. 39252
PROFESSIONAL ENGINEER
10.7.22

SCALE	1" = 30'
SECTION NO.	MOT -03
SHEET NO.	27 OF 48
PROJECT NO.	16-045

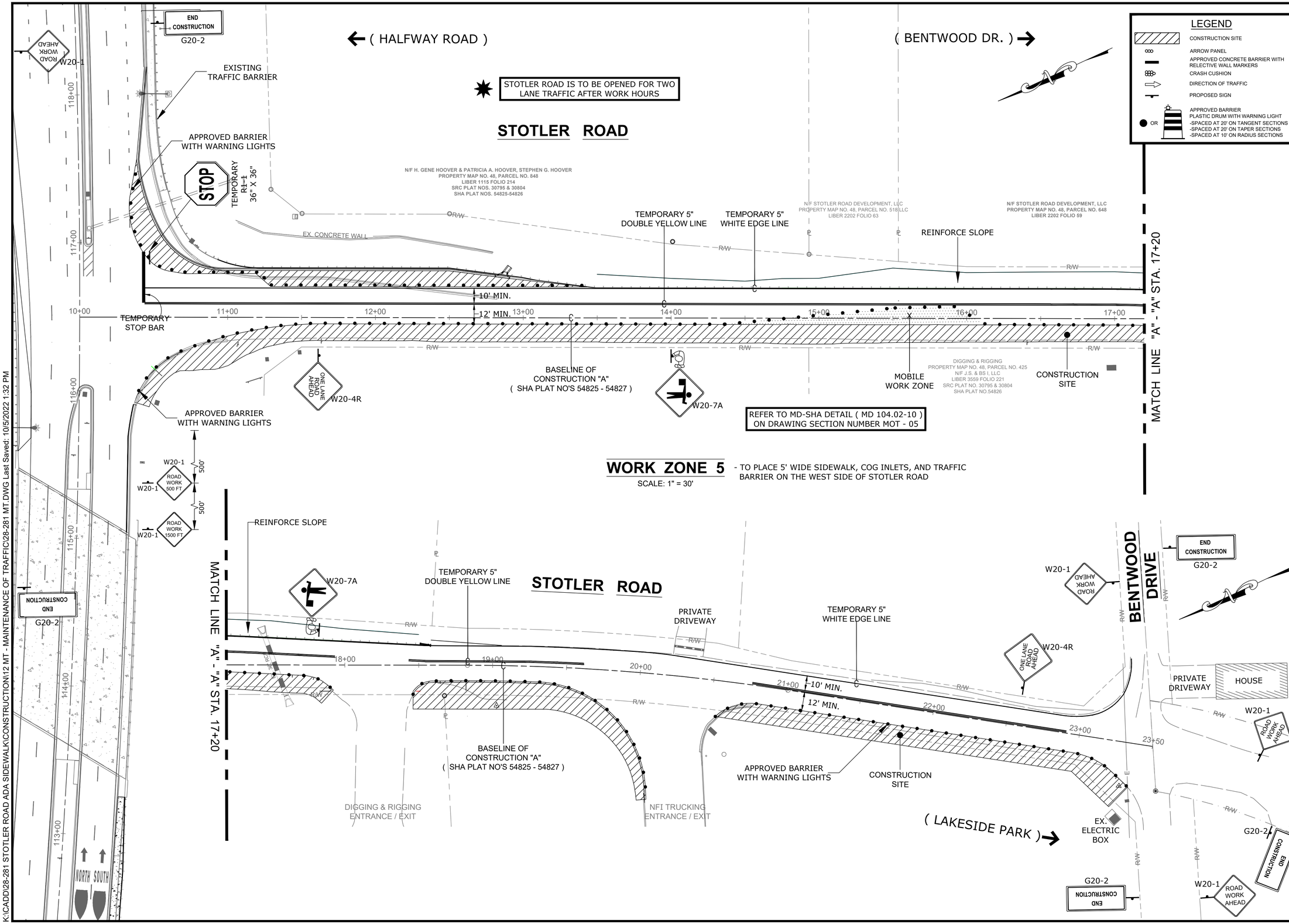

K:\CADD\28-281 STOTLER ROAD ADA SIDEWALK\CONSTRUCTION\12 MT - MAINTENANCE OF TRAFFIC\28-281 MT.DWG Last Saved: 10/5/2022 1:32 PM

NO.	REVISION DESCRIPTION	BY	DATE

DESIGNED BY: PJM
DRAWN BY: GLJ
CHECKED BY: PJM \ SH \ TP
DATE: 07-06-22

WASHINGTON COUNTY, MARYLAND
DIVISION OF ENGINEERING

Washington County Administrative Annex Building
747 Northern Avenue, Hagerstown, Maryland, 21742
Phone: 240-313-2460 Fax: 240-313-2401

INTERSECTION SIGNAL & SIDEWALK IMPROVEMENTS STOTLER RD. & HALFWAY BLVD. MOT - WORK ZONE 5

STATE OF MARYLAND
PAMELA JEAN NOWN
No. 39737
PROFESSIONAL ENGINEER
10.7.22

SCALE	AS NOTED
SECTION NO.	MOT -04
SHEET NO.	28 OF 48
PROJECT NO.	16-045

K:\CADD\28-281 STOTLER ROAD ADA SIDEWALK\CONSTRUCTION\12 MT - MAINTENANCE OF TRAFFIC\28-281 MT.DWG Last Saved: 10/5/2022 1:32 PM

GENERAL NOTES:

1. THE INTENT OF THESE NOTES AND PLANS ARE TO PERFORM THE REQUIRED WORK WITH THE LEAST INCONVENIENCE TO THE TRAVELING PUBLIC AND THE MAXIMUM SAFETY OF THE CONTRACTOR. ALL WORK SHALL BE PERFORMED IN ACCORDANCE TO THE MARYLAND DEPARTMENT OF TRANSPORTATION STATE HIGHWAY ADMINISTRATION WORK ZONE TRAFFIC CONTROL TYPICAL, THE MARYLAND MUTCD AND SUBSEQUENT REVISIONS ADOPTED BY THE STATE OF MARYLAND, THESE PLANS AND OTHER CONTRACT DOCUMENTS.

2. ALL SIGNS SHALL CONFORM TO THE LATEST VERSION OF MD-SHA'S STANDARD SIGN BOOK AND MD-SHA MUTCD AND STANDARD HIGHWAY SIGNS. ALL TEMPORARY TRAFFIC CONTROL WARNING SIGNS SHALL BE FLOURESCENT ORANGE, HIGH PERFORMANCE WIDE-ANGLE SHEETING. ALL SIGN SUPPORTS SHALL BE INSTALLED IN ACCORDANCE WITH MDSHA STD. NO. MD 104.01-17 (ROADSIDE SIGN/SIGN SUPPORT PLACEMENT).

3. EXISTING SIGNS AND PAVEMENT MARKINGS IN CONFLICT WITH THE MAINTENANCE OF TRAFFIC PLANS AND/OR TEMPORARY SIGNS NOT IN USE DURING A SPECIFIED STAGE OF CONSTRUCTION SHALL BE COVERED OR REMOVED, AND UNCOVERED/REPLACED AFTER COMPLETION OF CONSTRUCTION.

4. CONTRACTOR SHALL MAINTAIN ACCESS TO ALL PROPERTIES ABUTTING ROADWAYS/DRIVEWAYS IMPACTED BY WORK ZONE TRAFFIC CONTROL, WITH FLAGGER CONTROL IF NECESSARY IN ACCORDANCE WITH MD-SHA STD. NO. MD 104.02-14 (INTERSECTION FLAGGING OPERATION).

5. CONTRACTOR SHALL PROVIDE TEMPORARY PROVISIONS TO MAINTAIN PEDESTRIAN ACCESS TO BUSINESS AND HOMES ALONG THE CORRIDOR AT ALL TIMES DURING CONSTRUCTION. IF SHORT-TERM PEDESTRIAN DISRUPTION TO ADJACENT PROPERTIES AND DETERMINED TO BE NECESSARY BY THE COUNTY ENGINEER, THE TIMES AND DURATIONS OF DISRUPTIONS SHALL BE COORDINATED WITH THE AFFECTED PROPERTY OWNER. REFER TO SPECIAL PROVISION FOR TEMPORARY PEDESTRIAN PATHWAY FOR FURTHER DETAILS.

6. ALL EXCAVATION WITHIN THE ROADWAY SHALL BE PLATED AND/OR BACKFILLED AT THE END OF EACH WORK DAY. IF EXCAVATION IS PLATED, W8-8(4) "STEEL PLATES" SIGNS SHALL BE PLACED IN ADVANCE OF THE CONSTRUCTION AREA. ALL PLATES SHALL IN TRAFFIC LANES SHALL BE STAKED AND WEDGED WITH ASPHALT.

7. EQUIPMENT AND MATERIALS SHOULD NOT BE STORED IN SUCH A MANNER AS TO OBSTRUCT SIGHT DISTANCE AT ANY DRIVEWAY OR INTERSECTING ROAD.

8. UNLESS OTHERWISE SPECIFIED, VEHICLES AND EQUIPMENT SHALL ALWAYS MOVE WITH, NOT ACROSS OR AGAINST THE FLOW OF TRAFFIC, AND SHALL NOT ENTER OR LEAVE WORK AREAS IN A MANNER WHICH WILL BE HAZARDOUS TO, OR INTERFERE WITH NORMAL TRAFFIC FLOW. PERSONAL VEHICLES WILL NOT BE PERMITTED TO PARK WITHIN THE RIGHT-OF-WAY OF A TRAVELED ROADWAY, EXCEPT IN AREAS DESIGNATED BY THE COUNTY ENGINEER.

9. ALL TRAFFIC CONTROL DEVICES SHALL CONFORM TO TRANSPORTATION RESEARCH BOARD'S NCHRP REPORT 350. RECOMMENDED PROCEDURES FOR THE SAFETY PERFORMANCE EVALUATION OF HIGHWAY FEATURES. ALL TEMPORARY TRAFFIC CONTROL DEVICES SHALL BE REMOVED UPON COMPLETION OF THE WORK.

10. THE CONTRACTOR SHALL BE RESPONSIBLE FOR MAINTAINING ALL TRAFFIC CONTROL DEVICES THROUGHOUT ALL PHASES OF CONSTRUCTION.

11. ROADWAY EXCAVATION ADJACENT TO TRAVEL LANES SHALL NOT BE MORE THAN THE CONTRACTOR CAN BACKFILL TO WITHIN 2" OF THE ADJACENT ROADWAY GRADE, WITHIN THE SAME WORKING DAY. FOR GRADE DIFFERENCES OF 2" TO 6" THE CONTRACTOR SHALL REFER TO MD-SHA STANDARD NO.104.01-28, STAGE ROADWAY CONSTRUCTION TO WEDGE THE ROADWAY GRADE DIFFERENCES. FOR GRADE DIFFERENCES OF MORE THAN 6 INCHES, TEMPORARY CONCRETE BARRIERS SHALL BE USED OR THE MATERIAL SHALL BE WEDGED WITH AGGREGATE MATERIAL AT A 4:1 OR FLATTER SLOPE FROM THE EDGE OF THE PAVEMENT. WHEN A WEDGE IS UTILIZED, DRUMS SHALL BE POSITIONED ADJACENT TO THE EDGE OF THE WORK ON THE TRAFFIC SIDE OF THE SLOPE. ADDITIONAL ITEMS ASSOCIATED WITH TEMPORARY WEDGING ARE AN INCIDENTAL COST TO THE MAINTENANCE OF TRAFFIC (LS) ITEM.

12. CONTRACTOR SHALL UTILIZE TEMPORARY CONCRETE TRAFFIC BARRIER FOR MAINTENANCE OF TRAFFIC AS NEEDED DURING CONSTRUCTION.

13. ALL CONES, DRUMS, CONCRETE TRAFFIC BARRIER, AND FLAGGERS SHALL BE MOVED IN ACCORDANCE WITH CONSTRUCTION PROGRESS.

14. ALL SIGNS, DRUMS, AND CONCRETE BARRICADES SHALL BE NEW OR LIKE NEW CONDITION.

15. SHOULD ANY PAVED AREAS NOT TO BE REMOVED, RECONSTRUCTED AND/OR RESURFACED BECOME DAMAGED OR DESTROYED, DUE TO THE CONTRACTOR'S NEGLIGENCE OR FAILURE TO PROVIDE ADEQUATE SIGNS, BARRICADES, CONES, FLAGGERS OR OTHER TRAFFIC CONTROL DEVICES, THE RESTORATION OF THE PAVED AREAS SHALL BE AT THE CONTRACTOR'S EXPENSE. THIS RESTORATION SHALL BE TO THE SATISFACTION OF THE COUNTY ENGINEER.

16. TRAVEL LANES SHALL BE A MINIMUM OF TEN (10') FEET IN WIDTH AND TWELVE (12')FEET ON INTERSTATE RAMPS. IN THE EVENT THAT LANE CLOSURES ARE REQUIRED & APPROVED BY THE COUNTY ENGINEER, THE APPROPRIATE SIGNING & FLAGGING OPERATION SHALL BE USED IN ACCORDANCE WITH MUTCD. ALL LANES SHALL BE REOPENED TO TWO WAY TRAFFIC WHEN WORK IS SUSPENDED.

17. THE CONTRACTOR SHALL PROVIDE, ERECT, MAINTAIN (PROPER POSITION, CLEAN, LEGIBLE, AND IN GOOD WORKING CONDITION), AND REMOVE LIGHTS, SIGNS, DRUMS, BARRICADES, AND ALL OTHER TRAFFIC CONTROL DEVICES NECESSARY FOR THE MAINTENANCE OF TRAFFIC. PLACEMENT OF ALL TRAFFIC CONTROL DEVICES SHALL START AND PROCEED IN THE DIRECTION OF THE FLOW OF TRAFFIC. REMOVAL OF TRAFFIC CONTROL DEVICES SHALL START AT THE END OF THE CONSTRUCTION AREA AND PROCEED TOWARD ONCOMING TRAFFIC. THE CONTRACTOR SHALL PROVIDE FOR THE INSTALLATION OF ALL NECESSARY TRAFFIC CONTROL DEVICES BEFORE BEGINNING WORK AND IMMEDIATELY REMOVE THESE DEVICES WHEN WORK IS SUSPENDED OR COMPLETED. THE CONTRACTOR SHALL ALSO PROVIDE A CONTACT AVAILABLE 24/7 FOR REPAIR AND MAINTENANCE.

18. ALL TEMPORARY MARKINGS SHALL BE SPOTTED AND APPROVED BY THE COUNTY ENGINEER PRIOR TO BEING APPLIED.

TEMPORARY TRAFFIC CONTROL TYPICAL APPLICATION

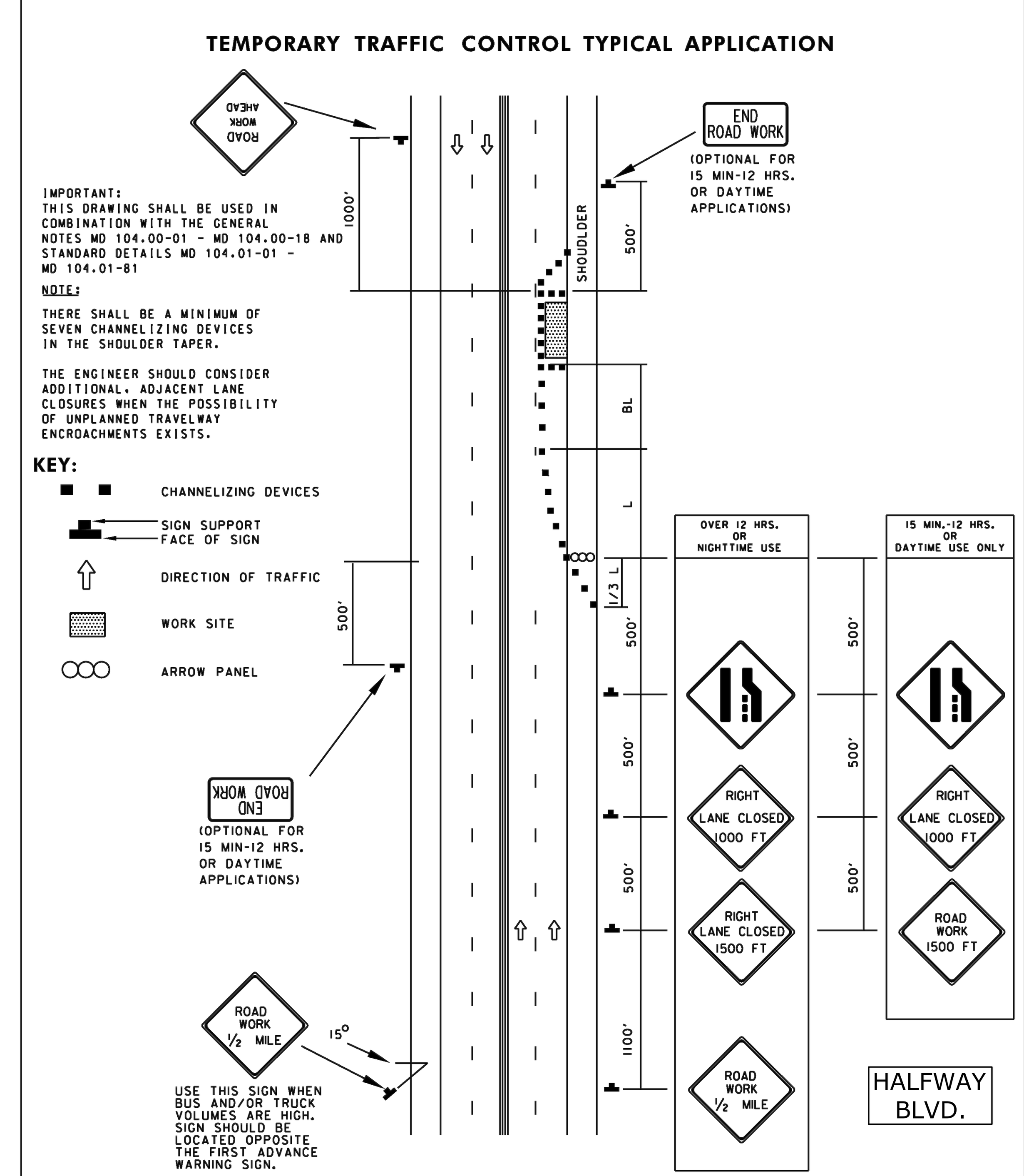

SPECIFICATION 104	CATEGORY CODE ITEMS	Maryland Department of Transportation STATE HIGHWAY ADMINISTRATION
APPROVED	DIRECTOR – OFFICE OF TRAFFIC AND SAFETY	STANDARDS FOR HIGHWAYS AND INCIDENTAL STRUCTURES
SHA StateHighway Administration	APPROVAL • SHA REVISIONS: APPROVAL 8-20-03; REVISED 8-11-10 / APPROVAL • FEDERAL HIGHWAY ADMINISTRATION: APPROVAL 9-23-03; REVISED 7-29-10	RIGHT LANE CLOSURE/MULTILANE UNDIV. EQL/LESS THAN 40 MPH
		STANDARD NO. MD 104.03-06

TEMPORARY TRAFFIC CONTROL TYPICAL APPLICATION

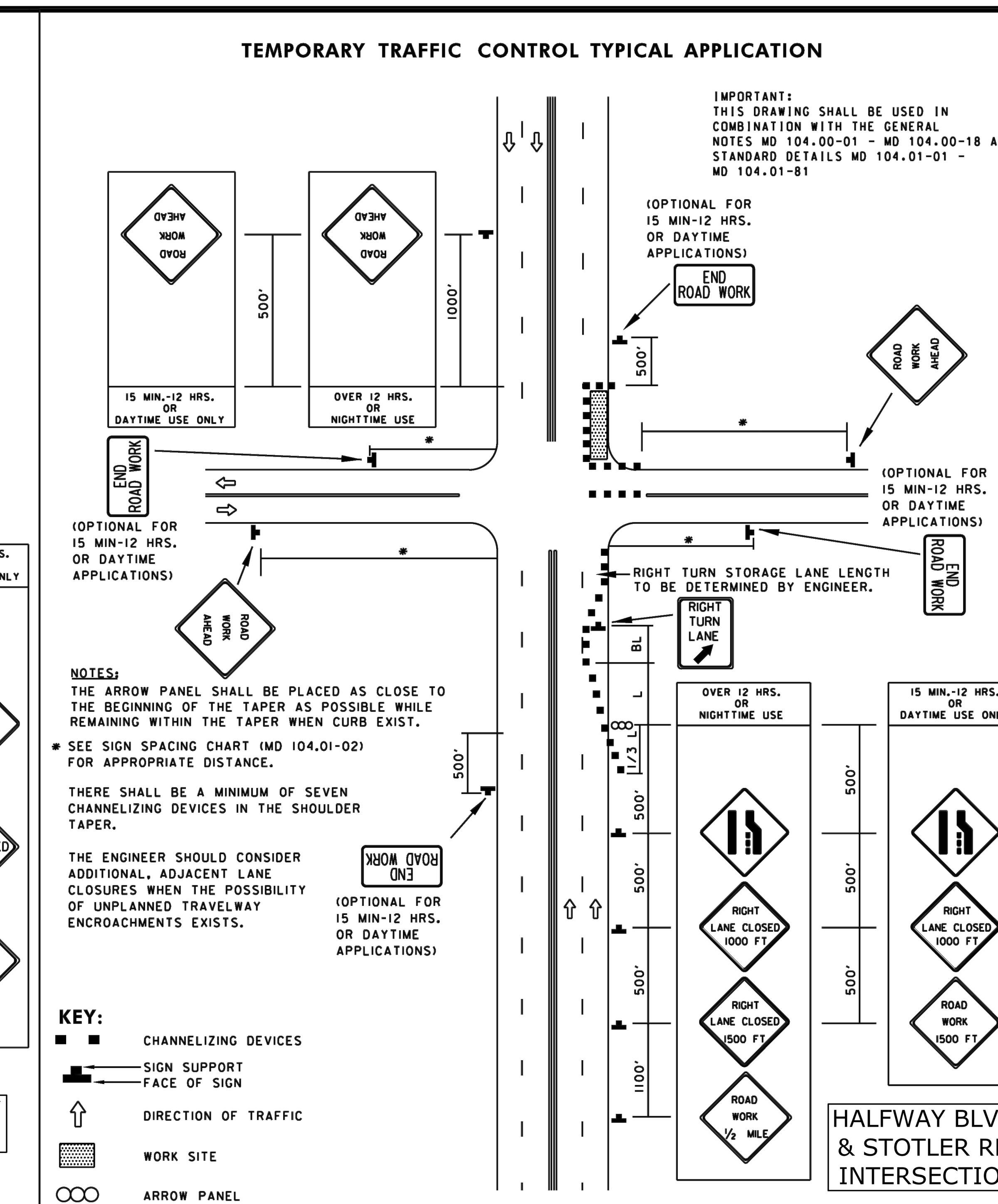

SPECIFICATION 104	CATEGORY CODE ITEMS	Maryland Department of Transportation STATE HIGHWAY ADMINISTRATION
APPROVED	DIRECTOR – OFFICE OF TRAFFIC AND SAFETY	STANDARDS FOR HIGHWAYS AND INCIDENTAL STRUCTURES
SHA StateHighway Administration	APPROVAL • SHA REVISIONS: APPROVAL 8-20-03; REVISED 8-11-10 / APPROVAL • FEDERAL HIGHWAY ADMINISTRATION: APPROVAL 9-23-03; REVISED 10-5-10	INTER. FAR-RIGHT LANE CLOSURE/ MULTILANE UNDIV. EQL/LESS THAN 40 MPH
		STANDARD NO. MD 104.03-12

TEMPORARY TRAFFIC CONTROL TYPICAL APPLICATION

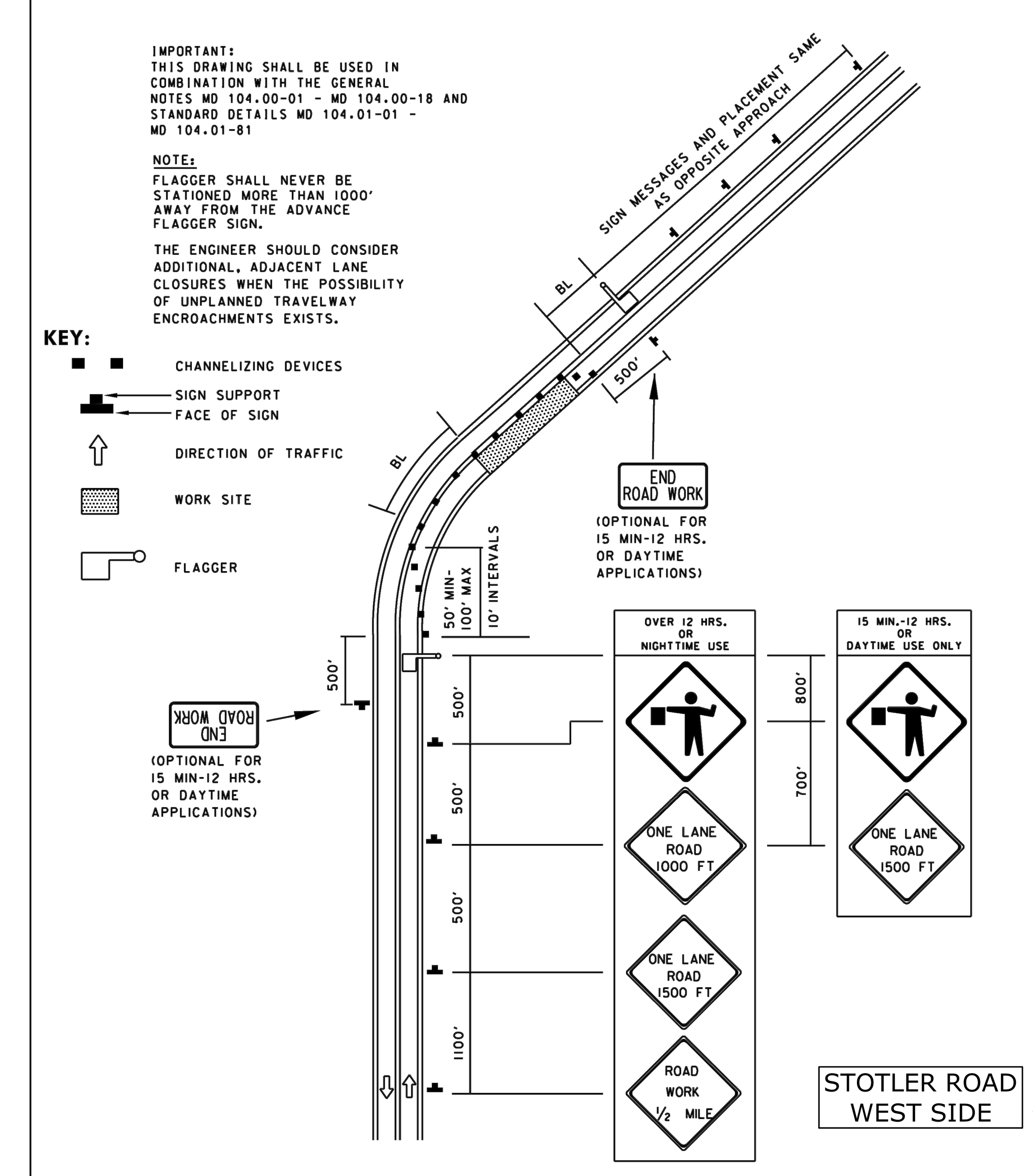

SPECIFICATION 104	CATEGORY CODE ITEMS	Maryland Department of Transportation STATE HIGHWAY ADMINISTRATION
APPROVED	DIRECTOR – OFFICE OF TRAFFIC AND SAFETY	STANDARDS FOR HIGHWAYS AND INCIDENTAL STRUCTURES
SHA StateHighway Administration	APPROVAL • SHA REVISIONS: APPROVAL 8-20-03; REVISED 8-11-10 / APPROVAL • FEDERAL HIGHWAY ADMINISTRATION: APPROVAL 9-23-03; REVISED 7-29-10	FLAGGING OPERATION/2-LANE, 2-WAY EQL/LESS THAN 40 MPH
		STANDARD NO. MD 104.02-10

NO.	REVISION DESCRIPTION	BY	DATE

DESIGNED BY: PJM
DRAWN BY: GLJ
CHECKED BY: PJM \ SH \ TP
DATE: 09-15-22

WASHINGTON COUNTY, MARYLAND
DIVISION OF ENGINEERING
Washington County Administrative Annex. Building
747 Northern Avenue, Hagerstown, Maryland, 21742
Phone: 240-313-2460 Fax: 240-313-2401

INTERSECTION SIGNAL & SIDEWALK IMPROVEMENTS STOTLER RD. & HALFWAY BLVD. MOT - DETAILS AND NOTES

STATE OF MARYLAND PAMELA JEAN MOHN No. 39252 PROFESSIONAL ENGINEER 10.7.22

SCALE: NONE
SECTION NO.: MOT - 05

PROJECT NO.: 16-045

TEMPORARY TRAFFIC CONTROL TYPICAL APPLICATION

IMPORTANT:
THIS DRAWING SHALL BE USED IN COMBINATION WITH THE GENERAL NOTES MD 104.00-01 - MD 104.00-18 AND STANDARD DETAILS MD 104.01-01 - MD 104.01-81

NOTES:

* THE ENGINEER MAY REQUIRE WIDER LANE WIDTHS AS NECESSARY. THIS MAY NECESSITATE A SHIFT IN THE PAVEMENT MARKING LINES.

SHOULDER CLOSED, NO PULL OFF AREA, AND PULL OFF AREA SIGNS SHALL BE MOUNTED ON THE SIDE OF THE ROADWAY WHERE THE SHOULDER IS AFFECTED. USAGE OF THESE SIGNS ON THE OPPOSITE SIDE OF DIVIDED HIGHWAYS IS OPTIONAL. MOUNT ALL OTHER SIGNS ON BOTH SIDES OF THE WORK-AFFECTED ROADWAY ON DIVIDED HIGHWAYS.

ON TWO-LANE, TWO-WAY ROADWAYS, FOR THE OPPOSITE APPROACH, MOUNT A "ROAD WORK AHEAD" SIGN 1000 FEET IN ADVANCE OF WORK AREA. ALSO, MOUNT AN "END ROAD WORK" SIGN 500 FEET PAST THE WORK AREA.

FOR DROP-OFF WITH AN ADJACENT LANE CLOSURE, SEE STANDARD MD 104.06-19.

THERE SHALL BE A MINIMUM OF SEVEN CHANNELIZING DEVICES IN THE SHOULDER TAPER.

SUPPLEMENTARY SIGNS MAY BE MOUNTED ON PORTABLE SIGN STANDS USING ADDITIONAL BRACKETS OBTAINED FROM THE STAND MANUFACTURER. SUPPLEMENTARY SIGNS SHALL NOT COVER ANY PART OF THE FACE OF THE PRIMARY SIGN.

KEY:
- CHANNELIZING DEVICES
- SIGN SUPPORT / FACE OF SIGN
- DIRECTION OF TRAFFIC
- WORK SITE
- CRASH CUSHION
- APPROVED BARRIER

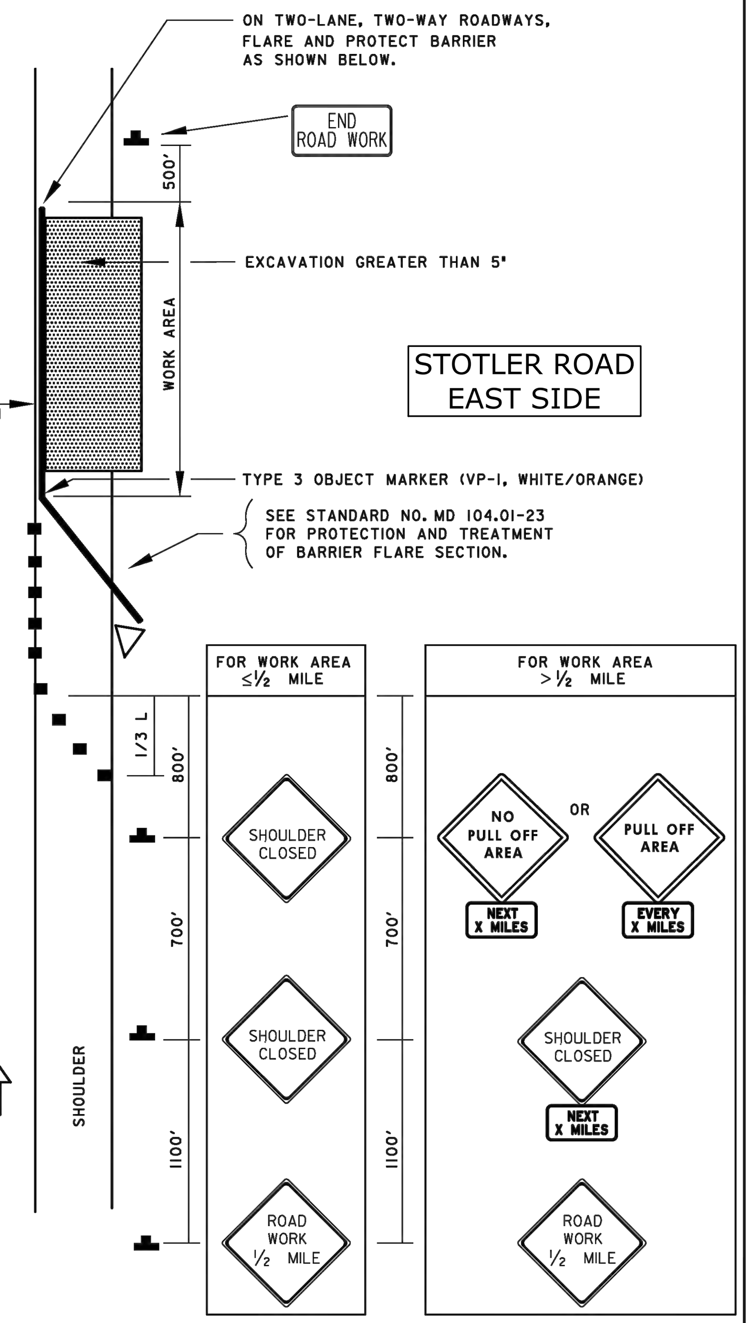

SPECIFICATION 104	CATEGORY CODE ITEMS
APPROVED	DIRECTOR - OFFICE OF TRAFFIC AND SAFETY

APPROVAL SHA REVISIONS		APPROVAL FEDERAL HIGHWAY ADMINISTRATION	
APPROVAL	8-20-03	APPROVAL	9-23-03
REVISED	8-11-10	REVISED	7-29-10
REVISED	2-23-18	REVISED	6-1-17
REVISED		REVISED	

MDOT MARYLAND DEPARTMENT OF TRANSPORTATION
STATE HIGHWAY ADMINISTRATION
STANDARDS FOR HIGHWAYS AND INCIDENTAL STRUCTURES
PAVEMENT EDGE DROP-OFF GREATER THAN 5 INCHES WITHOUT AN ADJACENT LANE CLOSURE
STANDARD NO. MD 104.06-18

TEMPORARY TRAFFIC CONTROL TYPICAL APPLICATION

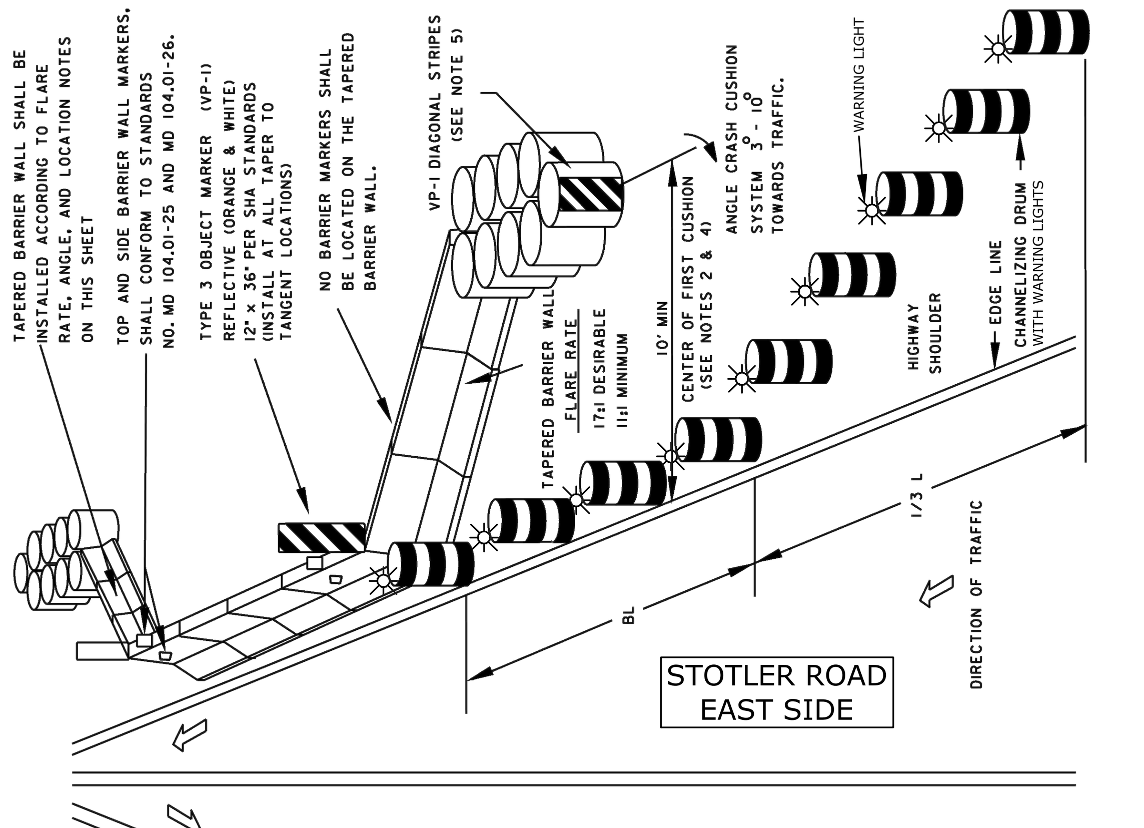

NOTES:
1. TEMPORARY EDGE LINE STRIPING-
   - TEMPORARY EDGE LINE STRIPING IS OPTIONAL ALONG THE ENTIRE LENGTH OF TANGENT BARRIER WALL UNLESS OTHERWISE SPECIFIED.
   - THE EDGE LINE SHALL BE REQUIRED WHERE BARRIER WOULD NOT BE TANGENT TO, OR WOULD BE TANGENT TO, BUT NOT WITHIN 2' OF PROJECTED EDGE LINE.
   - TEMPORARY EDGE LINE STRIPING SHALL BE REQUIRED ALONG THE TANGENT BARRIER WALL FOR A DISTANCE OF 100' PAST THE BEGINNING OF THE TANGENT SECTIONS.
   - THE EDGE LINE SHOULD BE PLACED 8" - 12" FROM AND ALONG THE THE BARRIER, WHEN POSSIBLE.
2. WHERE SPACE IS LIMITED AN END TREATMENT MAY BE INSTALLED AS APPROVED BY THE ENGINEER.
3. THE SLOPED END BARRIER TRANSITION IS NOT PERMITTED ON ANY ROADWAY WHERE THE TRAVEL SPEED IS GREATER THAN 25 MPH.
4. UNLESS CONDITIONS DETERMINE OTHERWISE, AS DETERMINED BY THE ENGINEER
5. REFLECTORIZATION IS REQUIRED ON INITIAL CRASH CUSHION, USE VP-1 WITH DIAGONAL STRIPES.
6. ON TWO-LANE, TWO-WAY ROADWAYS, THE TWO-WAY TRAFFIC TAPER SHALL BE A MINIMUM OF 100'.
7. TAPERED BARRIER WALL MAY BE CONNECTED TO EXISTING W BEAM AS DIRECTED BY THE ENGINEER. REFER TO CATEGORY 1 OF THE BOOK OF STANDARDS FOR RELEVANT STANDARD DETAIL(S).
8. IF THE TRAILING END OF THE BARRIER IS WITHIN THE CLEAR ZONE (REFER TO CLEAR ZONE CHART IN GENERAL NOTES), BARRIER PROTECTION IS REQUIRED.
9. THERE SHALL BE A MINIMUM OF SEVEN CHANNELIZING DEVICES IN THE SHOULDER TAPER.

SPECIFICATION 104	CATEGORY CODE ITEMS
APPROVED	DIRECTOR - OFFICE OF TRAFFIC AND SAFETY

APPROVAL • SHA REVISIONS		APPROVAL • FEDERAL HIGHWAY ADMINISTRATION	
APPROVAL	8-20-03	APPROVAL	9-23-03
REVISED	3-15-06	REVISED	
REVISED	8-11-10	REVISED	10-14-10
REVISED		REVISED	

Maryland Department of Transportation
STATE HIGHWAY ADMINISTRATION
STANDARDS FOR HIGHWAYS AND INCIDENTAL STRUCTURES
ADVANCE CHANNELIZATION AND PROTECTION FOR BARRIER FLARE SECTION
STANDARD NO. MD 104.01-23 B

TEMPORARY TRAFFIC CONTROL TYPICAL APPLICATION

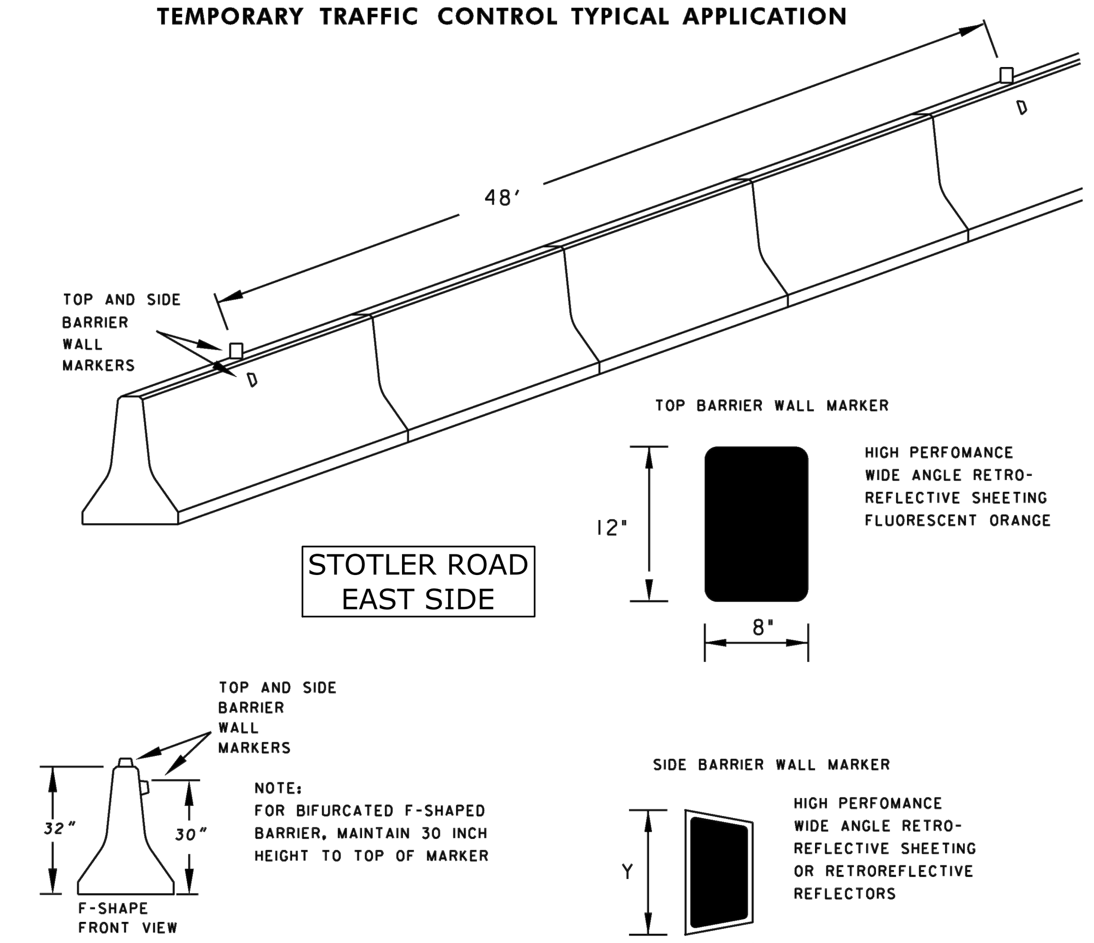

NOTES: SIDE BARRIER MARKERS SHALL BE YELLOW IN COLOR WHEN PLACED ON MEDIAN-SIDE BARRIER (SEPARATING OPPOSING TRAFFIC).

SIDE BARRIER MARKERS SHALL BE WHITE IN COLOR WHEN PLACED ON SHOULDER-SIDE BARRIER (OR BARRIER SEPARATING SAME DIRECTION TRAFFIC).

THE 48 FOOT SPACINGS BETWEEN MARKERS SHALL BE MAINTAINED ON CURVES/TURNS.

INSTALL SIDE MARKERS IN CONFORMANCE WITH MANUFACTURERS DIRECTIONS.

THE BOTTOM OF THE TOP MARKER SHALL BE AT THE SAME ELEVATION AS THE TOP OF THE BARRIER. NO ATTACHMENT METHOD MAY BLOCK ANY PART OF THE REFLECTIVE AREA OF THE MARKER. BACKING FOR TOP MARKERS SHALL BE SHEET ALUMINUM, MEETING MATERIAL THICKNESS PER TEMPORARY TRAFFIC SIGNS SPECIFICATIONS OR ANY OTHER MATERIAL APPROVED BY OOTS.

SPECIFICATION 104	CATEGORY CODE ITEMS
APPROVED	DIRECTOR - OFFICE OF TRAFFIC AND SAFETY

APPROVAL • SHA REVISIONS		APPROVAL • FEDERAL HIGHWAY ADMINISTRATION	
APPROVAL	8-20-03	APPROVAL	9-23-03
REVISED	5-29-07	REVISED	5-2-07
REVISED	8-11-10	REVISED	7-29-10
REVISED		REVISED	

Maryland Department of Transportation
STATE HIGHWAY ADMINISTRATION
STANDARDS FOR HIGHWAYS AND INCIDENTAL STRUCTURES
BARRIER DELINEATION BARRIER 4 FEET OR CLOSER TO EDGE LINE
STANDARD NO. MD 104.01-25

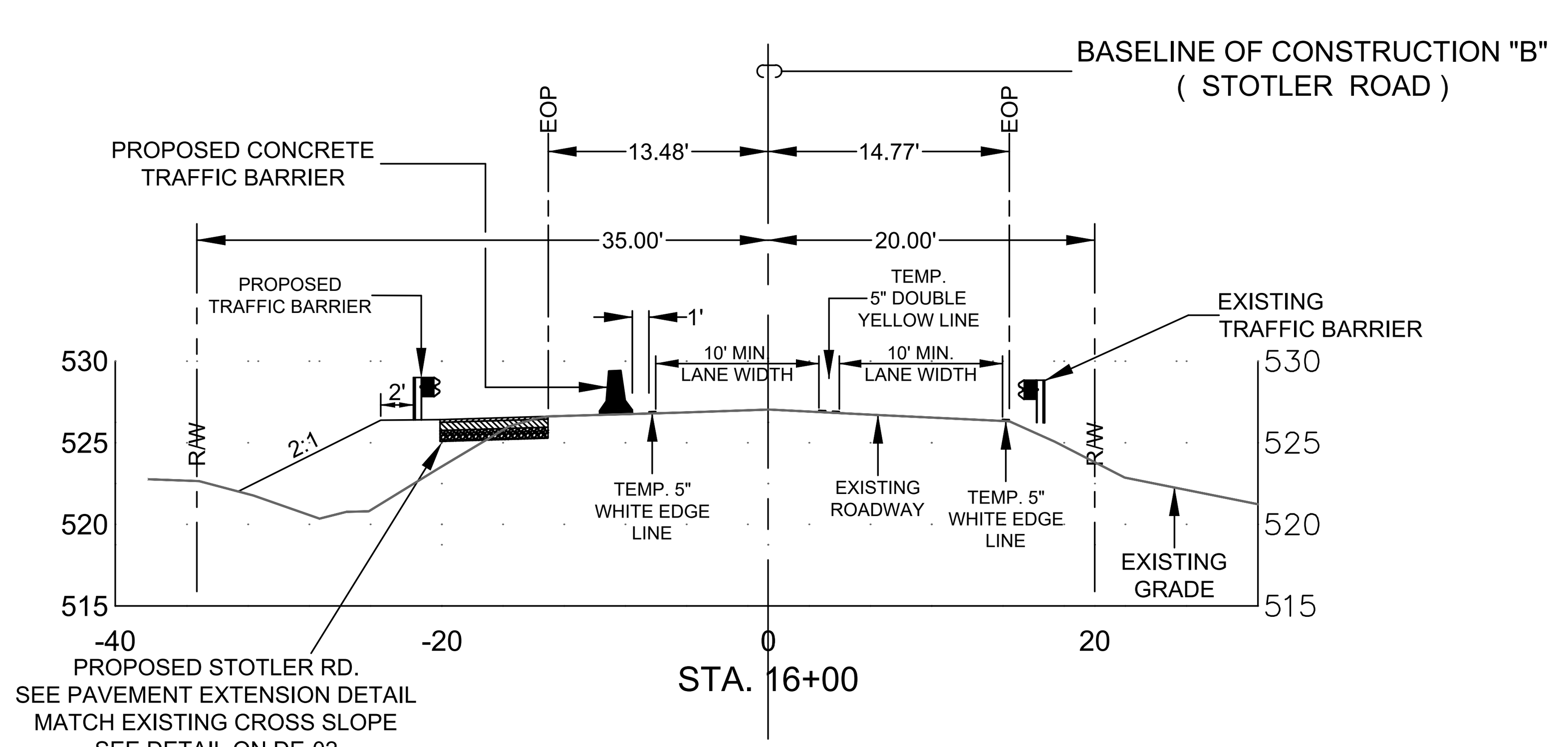

WORK ZONE 4 - TYPICAL SECTION
SCALE: NONE

TEMPORARY TRAFFIC CONTROL TYPICAL APPLICATION

IMPORTANT:
THIS DRAWING SHALL BE USED IN COMBINATION WITH THE GENERAL NOTES MD 104.00-01 - MD 104.00-18 AND STANDARD DETAILS MD 104.01-01 - MD 104.01-81

NOTES:
THE ARROW PANEL SHALL BE PLACED AS CLOSE TO THE BEGINNING OF THE TAPER AS POSSIBLE WHILE REMAINING WITHIN THE TAPER.

* SEE SIGN SPACING CHART (MD 104.01-02) FOR APPROPRIATE DISTANCE.

THE ENGINEER SHOULD CONSIDER ADDITIONAL, ADJACENT LANE CLOSURES WHEN THE POSSIBILITY OF UNPLANNED TRAVELWAY ENCROACHMENTS EXISTS.

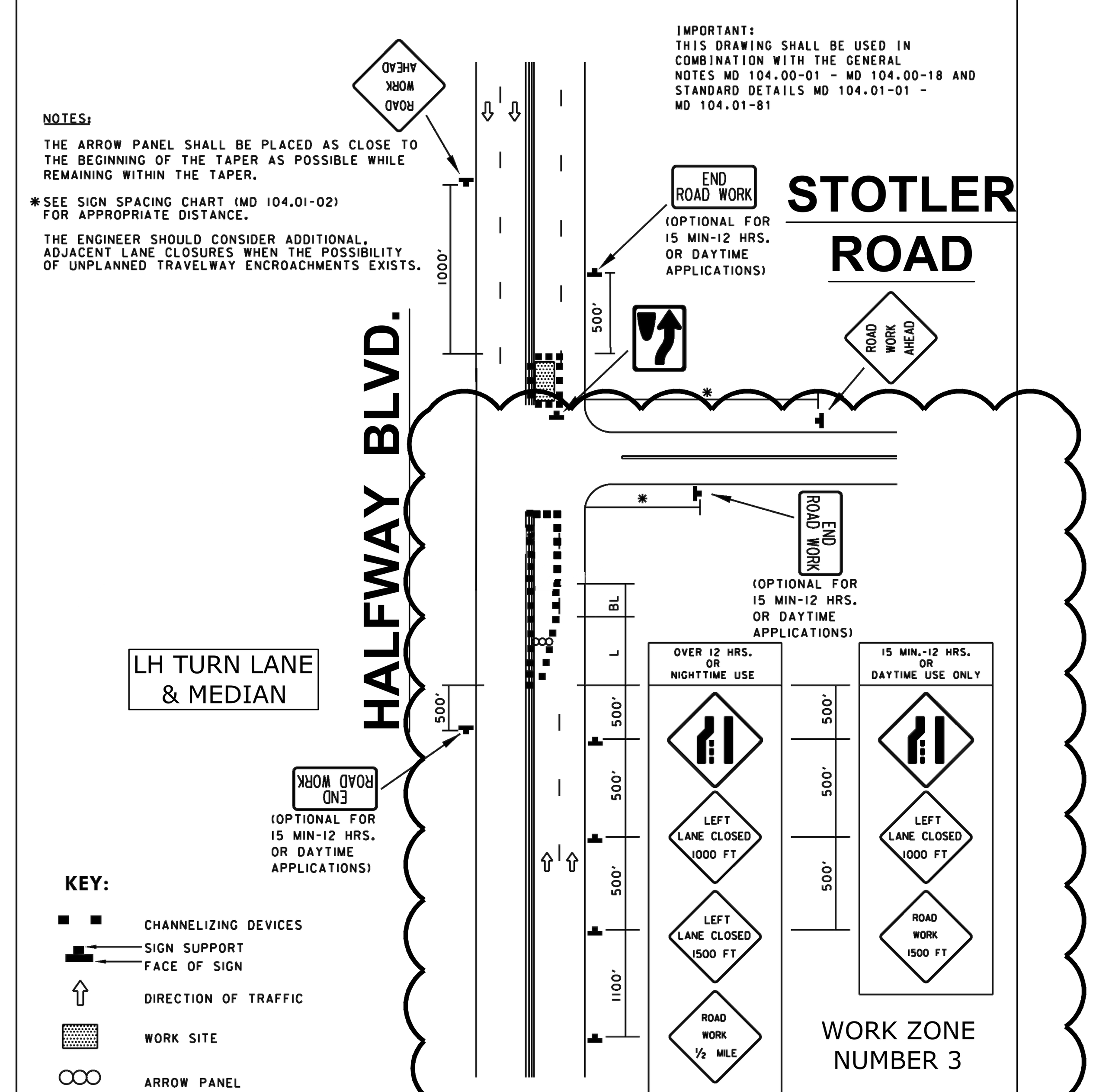

KEY:
- CHANNELIZING DEVICES
- SIGN SUPPORT / FACE OF SIGN
- DIRECTION OF TRAFFIC
- WORK SITE
- ARROW PANEL

SPECIFICATION 104	CATEGORY CODE ITEMS
APPROVED	DIRECTOR - OFFICE OF TRAFFIC AND SAFETY

APPROVAL • SHA REVISIONS		APPROVAL • FEDERAL HIGHWAY ADMINISTRATION	
APPROVAL	8-20-03	APPROVAL	9-23-03
REVISED	8-11-10	REVISED	10-5-10
REVISED		REVISED	
REVISED		REVISED	

Maryland Department of Transportation
STATE HIGHWAY ADMINISTRATION
STANDARDS FOR HIGHWAYS AND INCIDENTAL STRUCTURES
INTER. FAR-LEFT LANE CLOSURE/ MULTILANE UNDIV. EQL/LESS THAN 40 MPH
STANDARD NO. MODIFIED MD 104.03-10

TEMPORARY TRAFFIC CONTROL TYPICAL APPLICATION

NOTE:
THERE SHALL BE A MINIMUM OF SEVEN CHANNELIZING DEVICES IN THE SHOULDER TAPER.

THE ENGINEER SHOULD CONSIDER ADDITIONAL, ADJACENT LANE CLOSURES WHEN THE POSSIBILITY OF UNPLANNED TRAVELWAY ENCROACHMENTS EXISTS.

IMPORTANT:
THIS DRAWING SHALL BE USED IN COMBINATION WITH THE GENERAL NOTES MD 104.00-01 - MD 104.00-18 AND STANDARD DETAILS MD 104.01-01 - MD 104.01-81

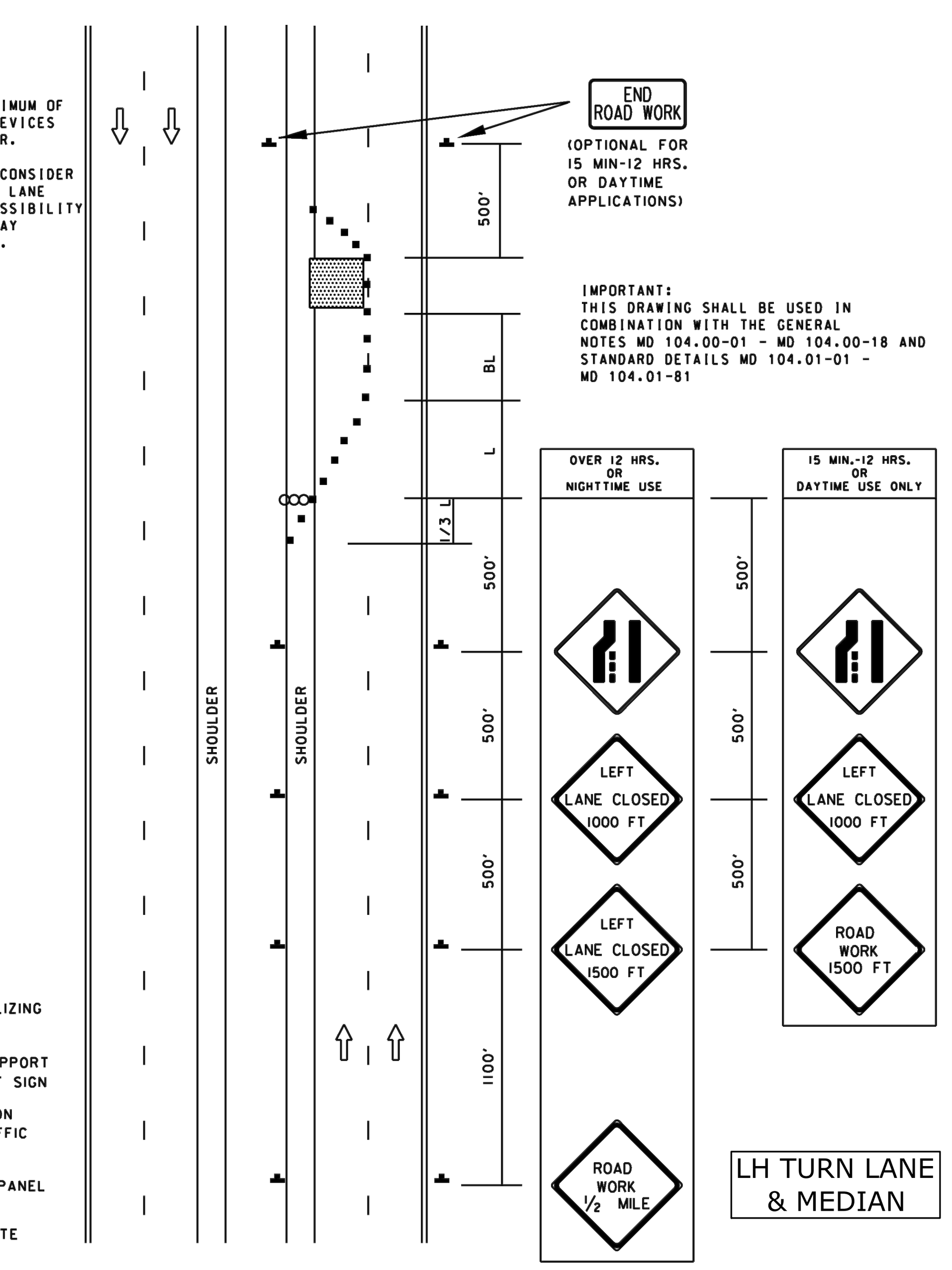

KEY:
- CHANNELIZING DEVICES
- SIGN SUPPORT / FACE OF SIGN
- DIRECTION OF TRAFFIC
- ARROW PANEL
- WORK SITE

SPECIFICATION 104	CATEGORY CODE ITEMS
APPROVED	DIRECTOR - OFFICE OF TRAFFIC AND SAFETY

APPROVAL • SHA REVISIONS		APPROVAL • FEDERAL HIGHWAY ADMINISTRATION	
APPROVAL	8-20-03	APPROVAL	9-23-03
REVISED	8-11-10	REVISED	7-29-10
REVISED		REVISED	
REVISED		REVISED	

Maryland Department of Transportation
STATE HIGHWAY ADMINISTRATION
STANDARDS FOR HIGHWAYS AND INCIDENTAL STRUCTURES
LEFT LANE CLOSURE/DIVIDED UNCON. EQL/LESS THAN 40 MPH
STANDARD NO. MD 104.04-04

NO.	REVISION DESCRIPTION	BY	DATE

DESIGNED BY: PJM
DRAWN BY: GLJ
CHECKED BY: PJM \ SH \ TP
DATE: 09-15-22

WASHINGTON COUNTY, MARYLAND
DIVISION OF ENGINEERING
Washington County Administrative Annex, Building
747 Northern Avenue, Hagerstown, Maryland, 21742
Phone: 240-313-2460 Fax: 240-313-2401

INTERSECTION SIGNAL & SIDEWALK IMPROVEMENTS STOTLER RD. & HALFWAY BLVD.
MOT - DETAILS

STATE OF MARYLAND · PAMELA JEAN MOHN · No. 39252 · PROFESSIONAL ENGINEER · 10.7.22

SCALE: AS NOTED
SECTION NO.: MOT - 06

PROJECT NO.: 16-045

CRITERIA

THE CONTRACTOR SHALL BE GOVERNED BY THE STANDARDS AND REQUIREMENTS OF THE FOLLOWING PUBLICATIONS, EXCEPT AS MODIFIED BY THE SPECIAL PROVISIONS OF THIS CONTRACT:

DESIGN

MDOT SHA - "MARYLAND MANUAL ON UNIFORM TRAFFIC CONTROL DEVICES", 2011 EDITION AND SUBSEQUENT REVISIONS. (MDMUTCD)

A A S H T O - "HIGHWAY SAFETY DESIGN AND OPERATIONS GUIDE" -1997

A A S H T O - "STANDARD SPECIFICATIONS FOR STRUCTURAL SUPPORTS FOR HIGHWAY SIGNS LUMINAIRES AND TRAFFIC SIGNALS", 2001 EDITION (CATEGORY II FOR ALL OVERHEAD AND CANTILEVER SIGN STRUCTURES).

MATERIALS AND CONSTRUCTION

MDOT SHA - "STANDARD SPECIFICATIONS FOR CONSTRUCTION & MATERIALS", MOST CURRENT EDITION AND SUBSEQUENT REVISIONS AND SUPPLEMENTS.

MDOT SHA - "BOOK OF STANDARDS FOR HIGHWAY AND INCIDENTAL STRUCTURES", MOST CURRENT EDITION AND SUBSEQUENT REVISIONS AND SUPPLEMENTS.

DESIGN WIND

100 MPH - WOOD SUPPORTS
10 YEAR RECURRENCE INTERVAL

100 MPH - GROUND MOUNT SIGN STEEL SUPPORTS
10 YEAR RECURRENCE INTERVAL

100 MPH - OVERHEAD AND CANTILEVER STRUCTURES
50 YEAR RECURRENCE INTERVAL

} ALL DISTRICTS

DESIGN STRESS

SOIL BEARING PRESSURE - S = 3,000 P.S.F. (ASSUMED)
SEE MATERIAL & CONSTRUCTION ABOVE AND SPECIAL PROVISIONS FOR DESIGN STRESSES FOR STRUCTURAL STEEL, ALUMINUM, REINFORCING STEEL AND CONCRETE.

CHAMFER

ALL EXPOSED EDGES OF CONCRETE SHALL HAVE A 3/4" X 3/4" CHAMFER.

CLASSIFICATION OF SIGNS

SIGNS ARE DIVIDED INTO TWO (2) GENERAL CATEGORIES.

1. GUIDE SIGNS
   A) STRUCTURAL TYPES
      OH - OVERHEAD
      C - CANTILEVER
      GM - GROUND MOUNT, BREAKAWAY OR NON-BREAKWAY
      BM - BRIDGE MOUNTED
   B) PANELS
      MATERIAL - EXTRUDED ALUMINUM
      COPY - DIRECT APPLIED
      1) HIGH INTENSITY (NEW SIGNS AND REVISIONS TO EXISTING SIGNS)
2. STANDARD SIGNS (REGULATORY, WARNING, ETC.)
   A) STRUCTURAL TYPES
      WOOD SUPPORTS
      SQUARE TUBE
   B) PANELS
      MATERIAL - SHEET ALUMINUM
      COPY - DIRECT APPLIED

IDENTIFICATION OF SIGNS AND PANELS

GUIDE SIGNS

EACH GUIDE SIGN IS IDENTIFIED BY A SIGN NUMBER ON THE PLANS AND IN THE TABULATIONS. (GM-1, GM-2, GM-3, etc)
SIGNS ON STRUCTURES ARE IDENTIFIED WITH A NUMBER AND WHERE VARIATIONS OCCUR, A LOWER CASE LETTER. (OH-1a, OH-1b, OH-1c)

STANDARD SIGNS

STANDARD SIGNS ARE IDENTIFIED BY PANEL NUMBERS AND ARE CLASSIFIED AS FOLLOWS
R - REGULATORY
W - WARNING
M - ROUTE MARKERS AND ACCESSORIES
D - DESTINATION AND MILEAGE PANELS
S - SCHOOL

PANELS SHALL BE DESIGNATED TO AGREE WITH MARYLAND STANDARD SIGN BOOK.
EACH STANDARD SIGN IS IDENTIFIED FIRST BY THE SHEET NUMBER, THEN BY THE NUMERICAL ORDER OF THE SIGN AS IT APPEARS ON THE PLAN.
FOR EXAMPLE SHEET SN 2.1-101,102,103, ETC. SHEET SN 2.2-201,202,203,ETC.

PANEL LAYOUT AND ALPHABETS

1. GUIDE SIGN PANEL LAYOUTS ARE BASED ON THE A.A.S.H.T.O. MANUALS NOTED ABOVE.
2. STANDARD SIGN PANEL LAYOUTS ARE BASED ON THE MDMUTCD WITH SPECIFICATIONS DETAILED IN THE MARYLAND STATE HIGHWAY ADMINISTRATION PUBLICATION, "STANDARD SIGN BOOK", AVAILABLE ONLINE AT http://apps.roads.maryland.gov/businesswithsha/bizstdsspecs/desmanualstdpub/publicationsonline/oots/internet_signbook.asp

ORIENTATION OF SIGN FACES

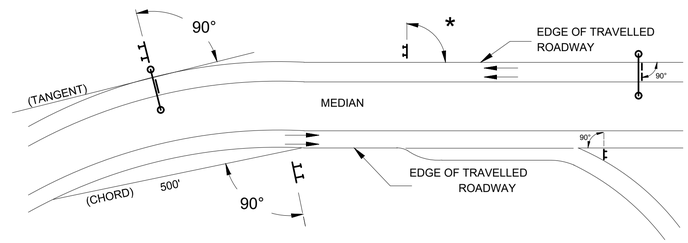

* UNDER 30 FEET FROM TRAVELLED ROADWAY TO NEAR EDGE OF SIGN - 93^ AWAY FROM THE ROAD TO AVOID SPECULAR REFLECTION AS INDICATED IN 813.03 OF THE MARYLAND STANDARD SPECIFICATIONS FOR CONSTRUCTION AND MATERIALS.

OVER 30 FEET FROM TRAVELLED ROADWAY TO NEAR EDGE OF SIGN - 90^

REFLECTORIZATION

BACKGROUNDS, BORDERS, TEXTS AND ALL OTHER ELEMENTS OF SIGN PANELS SHALL BE REFLECTORIZED EXCEPT WHERE NOTED. REFER TO PROJECT REQUIREMENTS FOR MORE DETAIL.

SIGN LOCATIONS

1. GUIDE SIGNS ARE LOCATED ON THE PLANS BY DIMENSION TO SURVEY STATIONS, OR WHEN NECESSARY, TO IDENTIFIABLE PHYSICAL FEATURES.
2. ALL CHANGES IN THE LOCATIONS OF SIGNS AS SHOWN ON THE PLAN SHALL HAVE THE PRIOR APPROVAL OF THE ENGINEER.

EXISTING UTILITIES

THE ENGINEER DOES NOT WARRANT OR GUARANTEE THE ACCURACY OR COMPLETENESS OF UTILITY INFORMATION SHOWN ON THE PLAN. IT SHALL BE THE RESPONSIBILITY OF THE CONTRACTOR TO LOCATE AND PROTECT ALL EXISTING FACILITIES WHICH MIGHT BE AFFECTED BY THIS WORK OR HIS OPERATION.

ROADSIDE SIGNS

1. VERTICAL ALIGNMENT
   POSITION PANEL SO FACE IS PLUMB.
2. HORIZONTAL ALIGNMENT (SEE DIAGRAM ABOVE)
   A) ON STRAIGHT ROADWAY SECTIONS, ANGLE OF SIGN FACE TO ROADWAY VARIES WITH DISTANCE FROM TRAVELLED ROADWAY TO NEAR EDGE OF SIGN - SEE DIAGRAM.
   B) ON THE INSIDE OF HORIZONTAL CURVES, POSITION SIGN SO FACE OF PANEL MAKES AN ANGLE OF 90^ WITH A CHORD BETWEEN A POINT ON NEAR EDGE OF PAVEMENT AT SIGN LOCATION AND A POINT ON EDGE OF PAVEMENT 500' IN ADVANCE OF SIGN.
   C) ON THE OUTSIDE OF HORIZONTAL CURVES, POSITION SIGN SO FACE OF PANEL IS AT RIGHT ANGLES TO THE TANGENT OF THE CURVE AT THE SIGN LOCATION.
   D) POSITIONING OF SIGNS AT GORES AND RAMP SEPARATIONS IS REFERRED TO THE NORMAL EDGE OF THE MAINLINE ROADWAY.

OVERHEAD SIGNS

1. VERTICAL ALIGNMENT
   POSITION PANELS FOR ALL OVERHEAD STRUCTURES SO THAT PANEL FACE IS PLUMB.
2. OVERHEAD SIGN STRUCTURES SHALL NOT BE ERECTED WITHOUT ATTACHING LUMINAIRES, SUPPORTS, AND/OR SIGNS.
3. HORIZONTAL ALIGNMENT
   A) POSITION ALL OVERHEAD SIGNS SO THAT THE FACE OF THE PANEL IS AT RIGHT ANGLES TO THE NORMAL EDGE OF ROADWAY, IF ON A STRAIGHT ROADWAY SECTION.
   B) POSITION ALL OVERHEAD SIGNS SO THAT THE FACE OF THE PANEL IS AT RIGHT ANGLES TO THE TANGENT OF THE CURVE AT SIGN LOCATION, IF ON A HORIZONTAL CURVE.
   C) POSITIONING OF SIGNS AT GORES AND RAMP SEPARATIONS IS REFERRED TO THE NORMAL EDGE OF THE MAINLINE ROADWAY.
4. VERTICAL CLEARANCE
   A) OVERHEAD SIGNS SHALL HAVE A MINIMUM VERTICAL CLEARANCE OF 17'-9" FROM ROADWAY TO THE BOTTOM OF LIGHT FIXTURES. ALL LIGHT FIXTURES ARE TO BE AT THE SAME ELEVATION.
   B) IF THE CONTRACTOR CANNOT OBTAIN 17'-9" (SEE 3A) CLEARANCE, HE IS TO CEASE WORK AND CONTACT THE PROJECT ENGINEER FOR FURTHER INSTRUCTIONS. THE PROJECT ENGINEER MAY CONTACT THE TRAFFIC ENGINEERING DESIGN DIVISION FOR ASSISTANCE.
   C) ON ALL OVERHEAD SIGNS, THE MINIMUM CLEARANCE TO BOTTOM OF DESIGN SIGN: 20'-9".

PROJECT REQUIREMENTS

ALL NEW SIGNS ON THIS PROJECT SHALL BE FABRICATED FROM SHEETING WHICH MEETS ALL OF THE FOLLOWING REQUIREMENTS, UNLESS OTHERWISE SPECIFIED IN THE CONTRACT DOCUMENTS, OR AS DIRECTED BY THE ENGINEER:

1. SHEETING SHALL MEET THE REQUIREMENTS OF SECTIONS 813 AND 950.03 OF MDOT SHA'S STANDARD SPECIFICATIONS FOR CONSTRUCTION AND MATERIALS 2017 EDITION AND SUBSEQUENT REVISIONS AND SUPPLEMENTS.

2. LISTED ON MDOT SHA OFFICE OF TRAFFIC AND SAFETY'S QUALIFIED PRODUCTS LIST (QPL).

PROJECT REQUIREMENTS CONTINUED

3. THE FOLLOWING TYPES OF SHEETING SHALL BE USED FOR THE SPECIFIED SIGN CLASSIFICATIONS:

GENERAL NOTE: ALL COLORS SHALL BE RETROREFLECTIVE EXCEPT BLACK. BLACK TEXT, BORDERS, SYMBOLS OR ANY BLACK ELEMENTS OF ANY SIGN SHALL BE NON-REFLECTIVE. THIS APPLIES TO ALL MDOT SHA SIGNS AS SHOWN BELOW.

A) GUIDE, EXIT GORE, GENERAL INFORMATION, AND SERVICE SIGNS - FALL INTO TWO SUB CATEGORIES:

(I). GROUND MOUNTED:
ALL RETROREFLECTIVE SHEETING ELEMENTS OF THESE SIGNS SHALL MEET OR EXCEED THE REQUIREMENTS FOR ASTM TYPE IX (9).

(II). OVERHEAD STRUCTURE SIGNS AND OVERHEAD CANTILEVER SIGNS:
ALL RETROREFLECTIVE SHEETING ELEMENTS OF ALL OVERHEAD SIGNS SHALL MEET OR EXCEED THE REQUIREMENTS FOR ASTM TYPE XI (11). (THIS SECTION DOES NOT APPLY TO OVERHEAD SIGNALIZED INTERSECTION SIGNING; MAST ARM OR SPAN WIRE. FOLLOW THE REQUIREMENTS FOR THE RESPECTIVE SIGN CLASSIFICATION FOR SIGNAL SIGNING.)

B) WARNING SIGNS - RETROREFLECTIVE SHEETING FOR WARNING SIGNS (FLUORESCENT YELLOW AND FLUORESCENT ORANGE) SHALL MEET OR EXCEED THE REQUIREMENTS FOR ASTM TYPE IX (9). REGULATORY MESSAGES WITHIN WARNING SIGNS SHALL FOLLOW THE REQUIREMENTS FOR REGULATORY SIGNS.

C) SCHOOL SIGNS - RETROREFLECTIVE SHEETING FOR SCHOOL SIGNS (FLUORESCENT YELLOW AND FLUORESCENT YELLOW-GREEN) SHALL MEET OR EXCEED THE REQUIREMENTS FOR ASTM TYPE IX (9). REGULATORY MESSAGES WITHIN SCHOOL SIGNS SHALL FOLLOW THE REQUIREMENTS FOR REGULATORY SIGNS.

D) REGULATORY SIGNS - FALL INTO THREE SUBCATEGORIES:

(I). "RED" REGULATORY SIGNS; (SPECIFICALLY - STOP, YIELD, DO NOT ENTER AND WRONG WAY). ALL RETROREFLECTIVE SHEETING ELEMENTS OF THESE SIGNS SHALL MEET OR EXCEED THE REQUIREMENTS FOR ASTM TYPE IX (9).

(II). ALL R7 AND R8 SERIES PARKING RELATED SIGNS AND THEIR SUPPLEMENTAL PANELS, NO TRESPASSING SIGNS, AND SIGNS DIRECTED AT PEDESTRIANS AND BICYCLISTS ONLY. ALL RETROREFLECTIVE SHEETING ELEMENTS OF THESE SIGNS SHALL MEET THE REQUIREMENTS FOR ASTM TYPE IV (4).

(III). ALL OTHER REGULATORY SIGNS - ALL RETROREFLECTIVE SHEETING ELEMENTS OF THESE SIGNS SHALL MEET ASTM TYPE IV (4) INCLUDING RED ELEMENTS. WARNING MESSAGES WITHIN REGULATORY SIGNS SHALL FOLLOW THE REQUIREMENTS FOR WARNING SIGNS.

E) ROUTE MARKERS (INDEPENDENT USE AND GUIDE SIGN USE)

INDEPENDENT USE: ALL RETROREFLECTIVE SHEETING ELEMENTS OF THESE SIGNS SHALL MEET BUT NOT TO EXCEED THE REQUIREMENTS FOR ASTM TYPE IV (4).

GUIDE SIGN USE: WHEN INCORPORATED IN THE BODY OF A GUIDE SIGN, ALL RETROREFLECTIVE SHEETING ELEMENTS OF THESE SIGNS SHALL MEET THE SHEETING REQUIREMENTS OF THE GUIDE SIGNS FOR WHICH THEY ARE TO BE APPLIED; GROUND MOUNT ASTM TYPE IX (9) OR OVERHEAD ASTM TYPE XI (11).

F) LOGOS AND / OR GRAPHICS - WITHIN SIGNS SHALL FOLLOW THE REQUIREMENTS FOR THE RESPECTIVE SIGN CLASSIFICATION UNLESS OTHERWISE SPECIFIED IN THE CONTRACT DOCUMENTS, OR AS DIRECTED BY THE ENGINEER.

G) SPECIFIC SERVICE (LOGO) SIGNING - ALL COPY, DIVIDER BORDERS, LOGOS AND ARROWS SHALL BE DEMOUNTABLE ALUMINUM OVERLAYS, .032 MINIMUM TO .063 MAXIMUM. ALL RETROREFLECTIVE SHEETING ELEMENTS OF THESE SIGNS SHALL MEET OR EXCEED THE REQUIREMENTS FOR ASTM TYPE IX (9). DISTANCES ON DIRECTIONAL ARROWS WHEN SPECIFIED SHALL BE BLACK. THE OVERLAYS ARE TO BE APPLIED WITH .125 ALUMINUM POP RIVETS TO THE BODY OF THE MAIN SIGN.

H) CIVIL DEFENSE SIGNS AND OTHER SIGNS - NOT SPECIFICALLY FALLING INTO ONE OF THE CATEGORIES ABOVE, SHALL FOLLOW THE GUIDELINES FOR THE SIGN CLASSIFICATION THAT MOST CLOSELY MATCHES THE COLOR(S) OF THE PROPOSED SIGN.

4. THE FOLLOWING MINIMUM THICKNESS SHALL BE USED FOR THE APPROPRIATE WIDTH OF SHEET ALUMINUM BLANKS:

LONGEST DIMENSION	MINIMUM THICKNESS
UP TO 12"	0.040"
GREATER THAN 12" TO 24"	0.063"
GREATER THAN 24" TO 36"	0.080"
GREATER THAN 36" TO 48"	0.100"
OVER 48"	0.125"

NO.	REVISION DESCRIPTION	BY	DATE

DESIGNED BY: PJM
DRAWN BY: GLJ
CHECKED BY: TP / PJM
DATE: 09-15-22

WASHINGTON COUNTY, MARYLAND
DIVISION OF ENGINEERING
Washington County Administrative Annex, Building
747 Northern Avenue, Hagerstown, Maryland, 21742
Phone: 240-313-2460 Fax: 240-313-2401

INTERSECTION SIGNAL & SIDEWALK IMPROVEMENTS
STOTLER RD. & HALFWAY BLVD.
PAVEMENT MARKING & SIGNAGE NOTES

STATE OF MARYLAND
PAMELA JEAN WOOTON
No. 39257
PROFESSIONAL ENGINEER
10.7.22

SCALE
NONE

SECTION NO.
PMS - 01

SHEET NO.
31 OF 48

PROJECT NO.
16-045

K:\CADD\28-281 STOTLER ROAD ADA SIDEWALK\CONSTRUCTION\13 SN - PAVEMENT MARKINGS & SIGNS\28-281 SN.DWG Last Saved: 10/5/2022 1:49 PM

SQUARE FOOT AREAS OF SYMBOLS AND ARROWS

SYMBOL	DESCRIPTION	AREA (SQ. FT.)
	THROUGH LANE-USE	12.5
	TURN LANE-USE (LEFT OR RIGHT)	15.5
	TURN AND THROUGH LANE-USE (LEFT OR RIGHT)	25.5
	LEFT AND RIGHT TURN LANE-USE	27.0
	ALL DIRECTIONS LANE-USE	38.5
	LANE-REDUCTION (LEFT OR RIGHT)	42.0
	FREEWAY, EXPRESSWAY AND RAMP ARROW	24.4
	WRONG WAY ARROW	23.8
	HOV LANE	13.5
	ACCESSIBILITY SYMBOL (BLUE BACKGROUND)	
	40"X40" (STANDARD)	11.5
	48"X48" (SPECIAL)	16.0
R X R	RAILROAD-CROSSING	64.7 (TOTAL)
	"R" (6' HIGH)	3.6 (EACH)
	"X" (20' HIGH)	57.5
	YIELD AHEAD TRIANGLE	
	POSTED SPEED LIMIT 45 MPH OR GREATER	43.0
	POSTED SPEED LIMIT LESS THAN 45 MPH	34.0
	SHARKS TEETH	
	12"X18" POSTED SPEED LIMIT LESS THAN 45 MPH	0.75
	24"X36" POSTED SPEED LIMIT 45 MPH OR GREATER	3.0
	BIKE LANE DETECTOR 12"X43"	1.0
	SHARED LANE (SHARROW) 40"X112"	9.0
	BIKE LANE ARROW 24"X72"	5.0
	BIKE LANE (STANDARD) 40"X72"	5.0
	BIKE LANE (ALTERNATE NOT FOR USE ON STATE ROADWAYS) 40"X72"	6.0

SQUARE FOOT AREAS OF LEGENDS

LEGEND	SIZE/DESCRIPTION	AREA (SQ. FT.)
AHEAD	8' HIGH	29.0
LANE	8' HIGH (STANDARD)	22.3
LEFT	8' HIGH	18.2
ONLY	8' HIGH	20.8
PED	8' HIGH	17.3
RIGHT	8' HIGH	24.5
SCHOOL	8' HIGH (STANDARD)	32.3
	10' HIGH (ACROSS TWO LANES)	94.0
SLOW	8' HIGH	22.8
STOP	8' HIGH	20.8
TURN	8' HIGH	22.8
XING	8' HIGH	20.3
YIELD	8' HIGH	22.3

SQUARE FOOT AREAS OF NUMBERS

SIZE \ NUMBER	1	2	3	4	5	6	7	8	9	0
SMALL (6 FT.)	1.5	3.3	3.3	2.9	3.5	3.5	2.2	3.8	3.5	3.4
LARGE (8 FT.)	2.6	5.8	5.8	5.1	6.1	6.2	3.8	6.7	6.2	6.0

SQUARE FOOT AREAS OF LETTERS

SIZE \ LETTER	A	B	C	D	E	F	G	H	I	J	K
SMALL (6 FT.)	3.1	4.0	2.7	3.4	3.3	2.6	3.3	3.4	1.5	2.1	3.1
LARGE (8 FT.)	5.5	7.1	4.8	6.1	5.9	4.7	5.8	6.0	2.6	3.7	5.7

L	M	N	O	P	Q	R	S	T	U	V	W	X	Y	Z
2.2	4.2	4.0	3.4	3.0	3.6	3.6	3.2	2.2	3.2	2.7	4.2	2.7	2.2	2.9
3.8	7.4	7.1	6.0	5.3	6.3	6.3	5.7	3.8	5.6	4.8	7.3	4.8	3.9	5.1

NOTE: REFER TO THE MOST RECENT VERSION OF THE MARYLAND MANUAL ON UNIFORM TRAFFIC CONTROL DEVICES AND THE FHWA STANDARD HIGHWAY SIGNS MANUAL FOR DIMENSIONS OF ALL PAVEMENT MARKING LETTERS, SYMBOLS, ARROWS, AND NUMBERS.

SPECIFICATION | CATEGORY CODE ITEMS
APPROVED — DIRECTOR – OFFICE OF TRAFFIC AND SAFETY
APPROVAL • SHA REVISIONS: APPROVAL 5-21-14 | APPROVAL • FEDERAL HIGHWAY ADMINISTRATION: APPROVAL 5-20-14
Maryland Department of Transportation
STATE HIGHWAY ADMINISTRATION
STANDARDS FOR HIGHWAYS AND INCIDENTAL STRUCTURES
SQUARE FOOT AREAS OF PAVEMENT MARKING LETTERS, SYMBOLS, ARROWS AND NUMBERS
STANDARD NO. MD 550.01

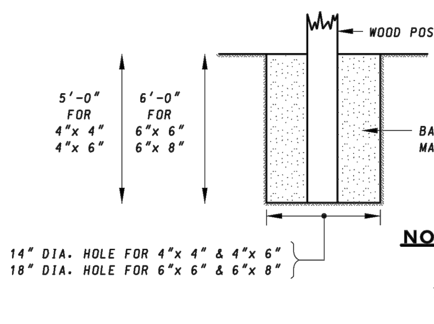

NOTE:
TREATED WOODEN POST SHALL BE PLACED IN PRE-DUG HOLE IN GROUND, BACKFILLED USING SUITABLE MATERIAL, AND TAMPED THOROUGHLY TO PROVIDE A RIGID SUB-SURFACE CONDITION AROUND THE POST.

TYPICAL FOUNDATION FOR WOOD SUPPORTS

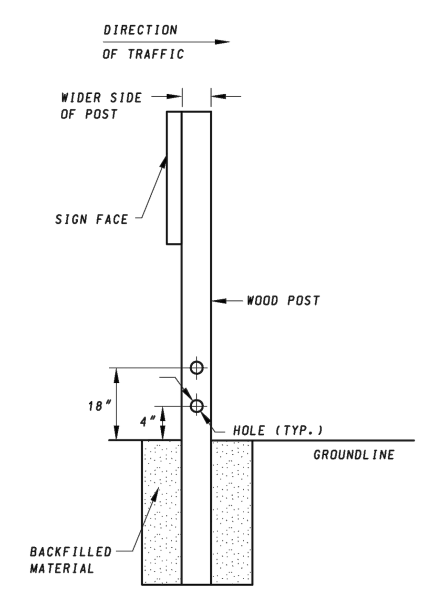

WOOD POST MODIFICATIONS FOR BREAKAWAY FEATURE

POST SIZE	HOLE DIA. (IN.)
4"x 4"	--
4"x 6"	$1\frac{1}{2}$
6"x 6"	2
6"x 8"	3

NOTES:
1. ALL WOOD POSTS LARGER THAN 4"x 4" SHALL BE MADE BREAKAWAY BY DRILLING TWO HOLES CENTERED AT 4" AND 18" ABOVE THE GROUNDLINE AND PERPENDICULAR TO THE ROADWAY.
2. ALL SUPPORTS WITHIN THE CLEAR ZONE SHALL BE BREAKAWAY UNLESS PROTECTED.

WOOD POST MODIFICATIONS FOR BREAKAWAY FEATURE

SPECIFICATION 812 | CATEGORY CODE ITEMS
APPROVED — DIRECTOR – OFFICE OF TRAFFIC AND SAFETY
APPROVAL • SHA REVISIONS: APPROVAL 10-10-00, REVISED 5-17-07 | APPROVAL • FEDERAL HIGHWAY ADMINISTRATION: APPROVAL 2-1-01, REVISED 5-2-07
REFERENCED ON: MD 812.04, MD 813.01
Maryland Department of Transportation
STATE HIGHWAY ADMINISTRATION
STANDARDS FOR HIGHWAYS AND INCIDENTAL STRUCTURES
WOOD SIGN SUPPORT FOUNDATIONS AND BREAKAWAY FEATURES
STANDARD NO. MD 812.01

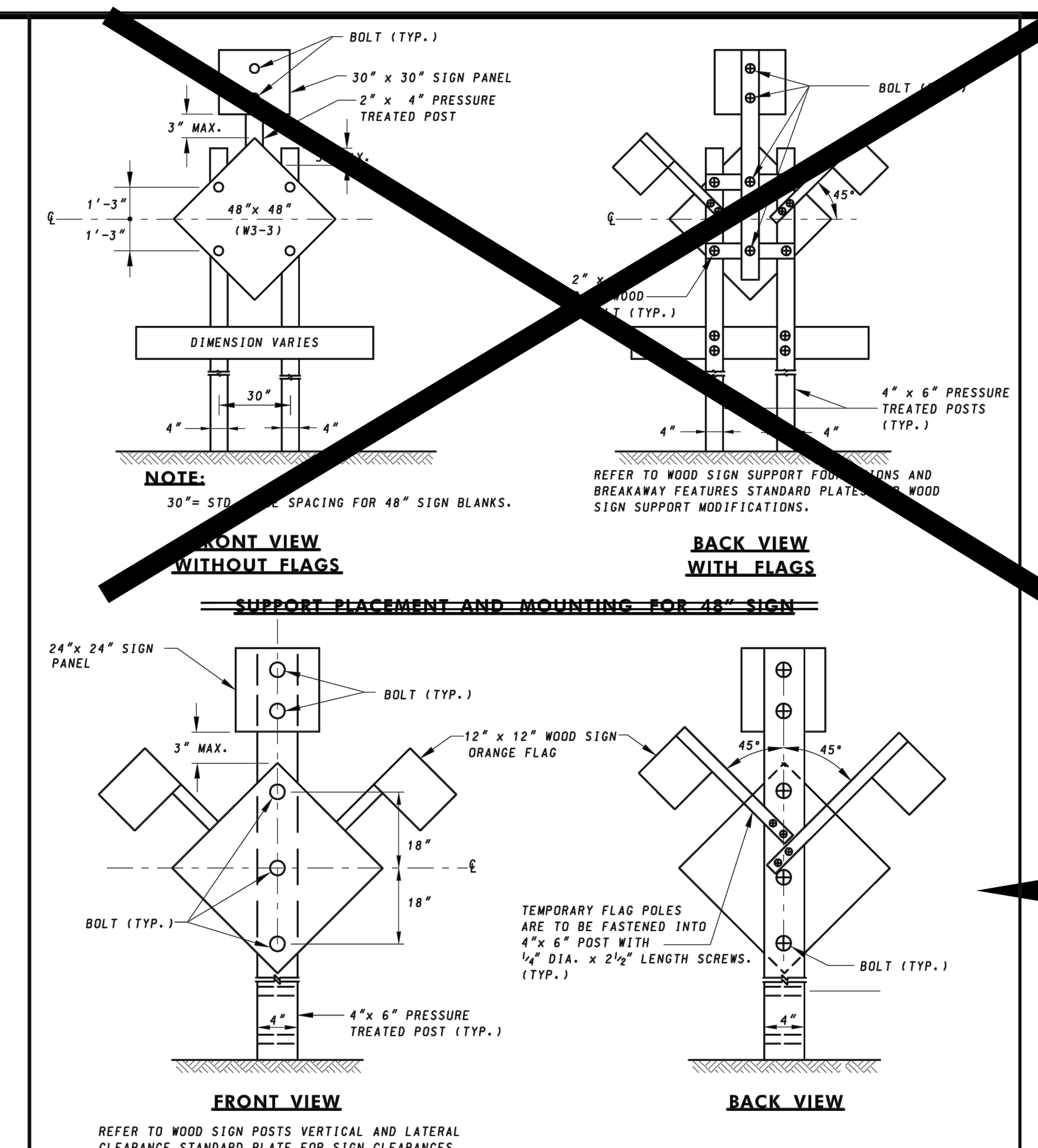

SUPPORT PLACEMENT AND MOUNTING FOR 36" SIGN

SPECIFICATION 812, 813 | CATEGORY CODE ITEMS
APPROVED — DIRECTOR – OFFICE OF TRAFFIC AND SAFETY
APPROVAL • SHA REVISIONS: APPROVAL 7-1-94, REVISED 5-17-07 | APPROVAL • FEDERAL HIGHWAY ADMINISTRATION: APPROVAL 7-1-94, REVISED 5-2-07
Maryland Department of Transportation
STATE HIGHWAY ADMINISTRATION
STANDARDS FOR HIGHWAYS AND INCIDENTAL STRUCTURES
GROUND MOUNTED SIGN DETAILS (W3-3 NEW)
STANDARD NO. MD 813.01

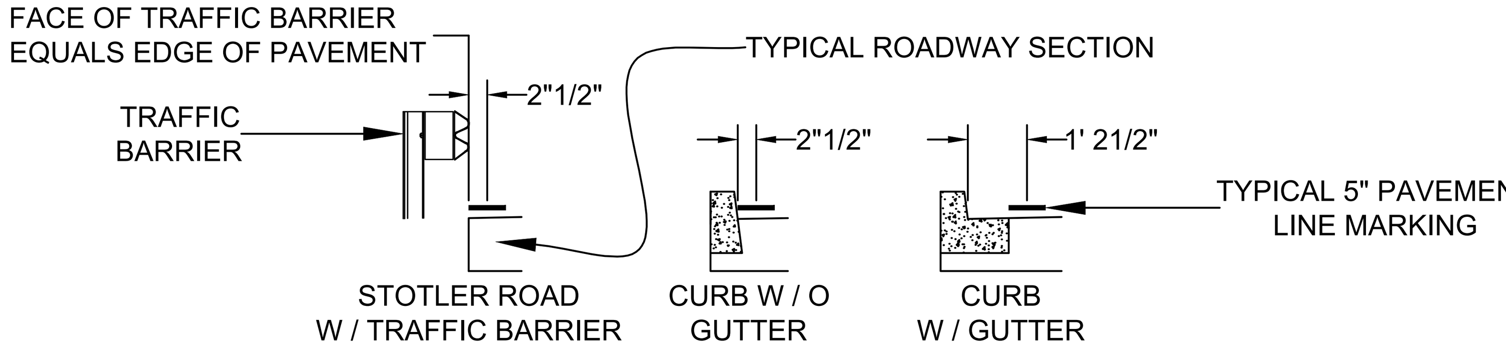

TYPICAL LINE PLACEMENT DETAIL
SCALE: NONE

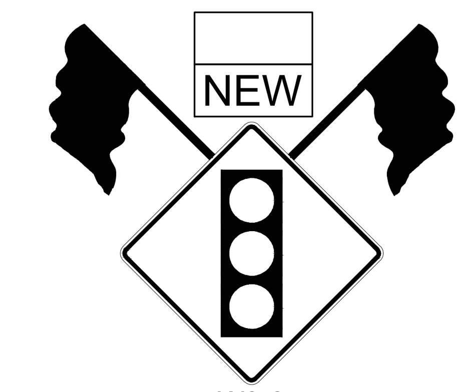

W3-3
(36"x36")

"NEW" PANEL
AND ORANGE PLACARD
(24" X 24")

12" X 12" FLAGS
S-01
S-02

ON A WOODEN POST
SEE MARYLAND STANDARDS
MD. 812.01 & MD. 813.01
(THREE PLACES)

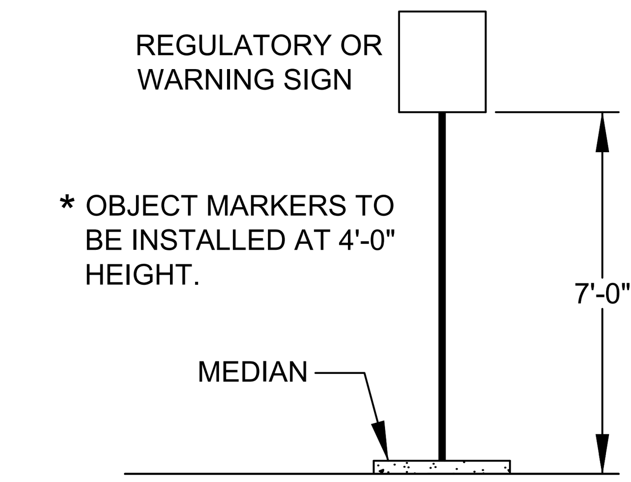

MEDIAN SIGN INSTALLATION
SCALE: NONE

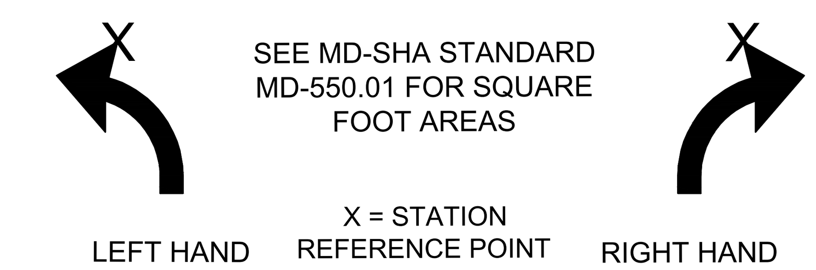

PAVEMENT MARKINGS
SCALE: NONE

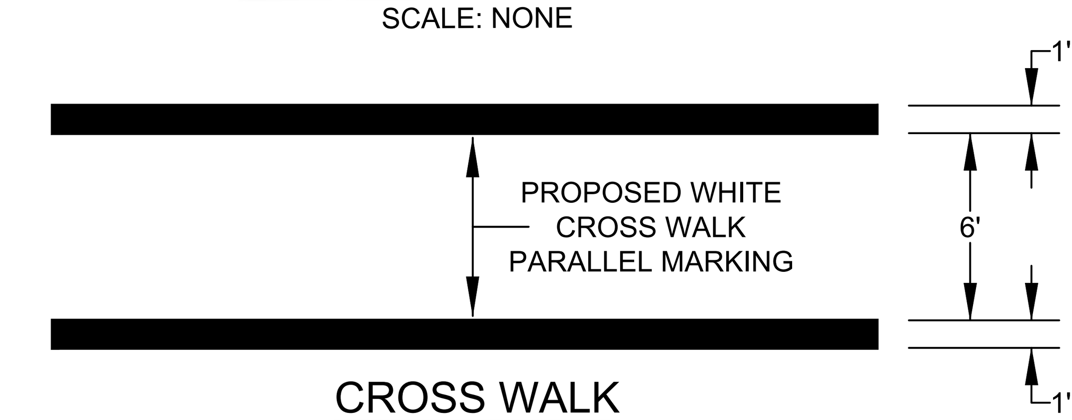

CROSS WALK
SCALE: NONE

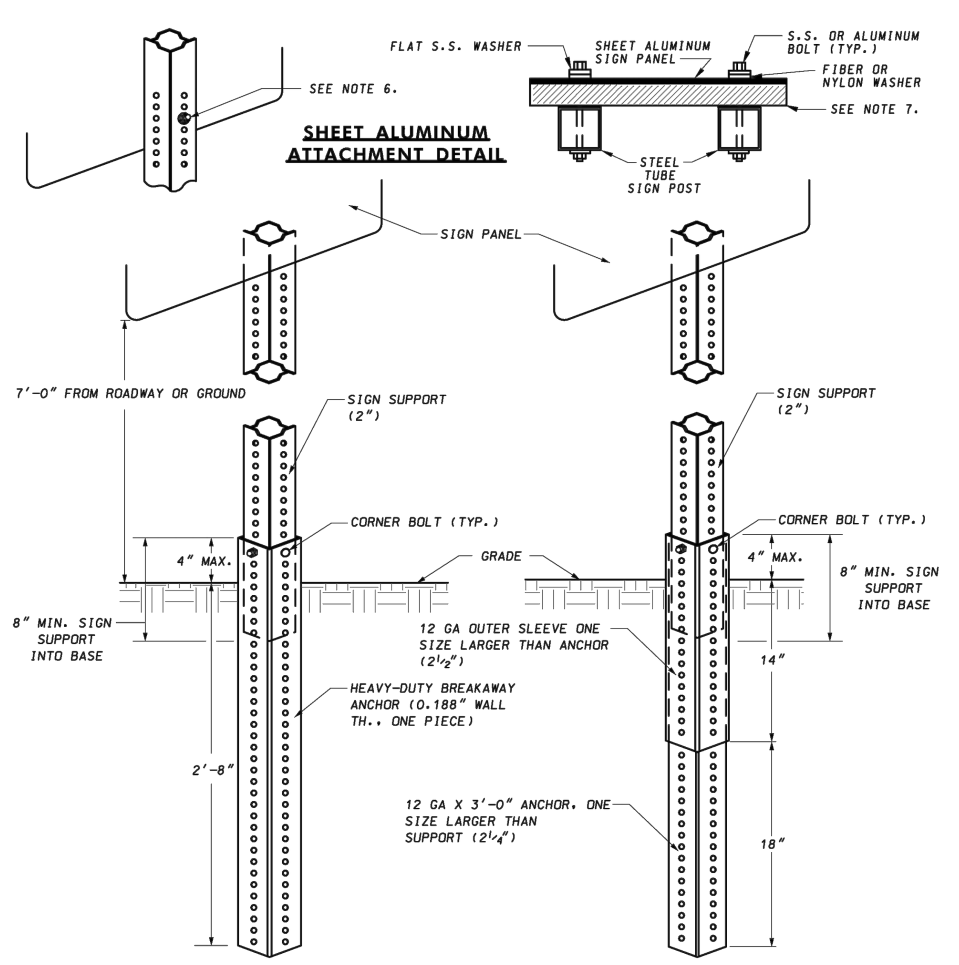

NOTES:
1. INSTALLATION SHALL BE PERFORMED PER MANUFACTURER'S RECOMMENDATIONS.
2. CORNER BOLTS AND HARDWARE SHALL BE AS APPROVED BY AASHTO AND PER MANUFACTURER'S RECOMMENDATIONS.
3. THE INSTALLATION SHALL MEET THE LATEST AASHTO BREAKAWAY REQUIREMENTS.
4. SPLICES SHALL NOT BE USED TO EXTEND THE HEIGHT OF A SIGN POST.
5. ONLY 2" SIGN SUPPORTS SHALL BE USED. SIGN POSTS GREATER THAN OR LESS THAN 2" ARE NOT PERMITTED.
6. FOR SHEET ALUMINUM ATTACHMENT, ALL BOLTS SHALL BE 3/8" F593 (18-8 TYPE 303-304) STAINLESS STEEL OR ANODIZED ALUMINUM HEX HEAD BOLT WITH WASHERS AND NUTS SPACED AT 12" MAXIMUM.
7. ALL SHEET ALUMINUM SIGNS 5' WIDE AND LARGER SHALL BE BRACED WITH TWO HORIZONTAL 2"X4" TREATED WOOD OR EQUAL, ATTACHED TO THE SUPPORTS. THE BOLT LENGTHS SHALL BE COORDINATED.

SPECIFICATION 802 | CATEGORY CODE ITEMS
APPROVED — DIRECTOR – OFFICE OF TRAFFIC AND SAFETY
APPROVAL • SHA REVISIONS: APPROVAL 5-17-07 | APPROVAL • FEDERAL HIGHWAY ADMINISTRATION: APPROVAL 5-2-07
Maryland Department of Transportation
STATE HIGHWAY ADMINISTRATION
STANDARDS FOR HIGHWAYS AND INCIDENTAL STRUCTURES
BREAKAWAY TUBULAR STEEL SIGN SUPPORTS
STANDARD NO. MD 802.04

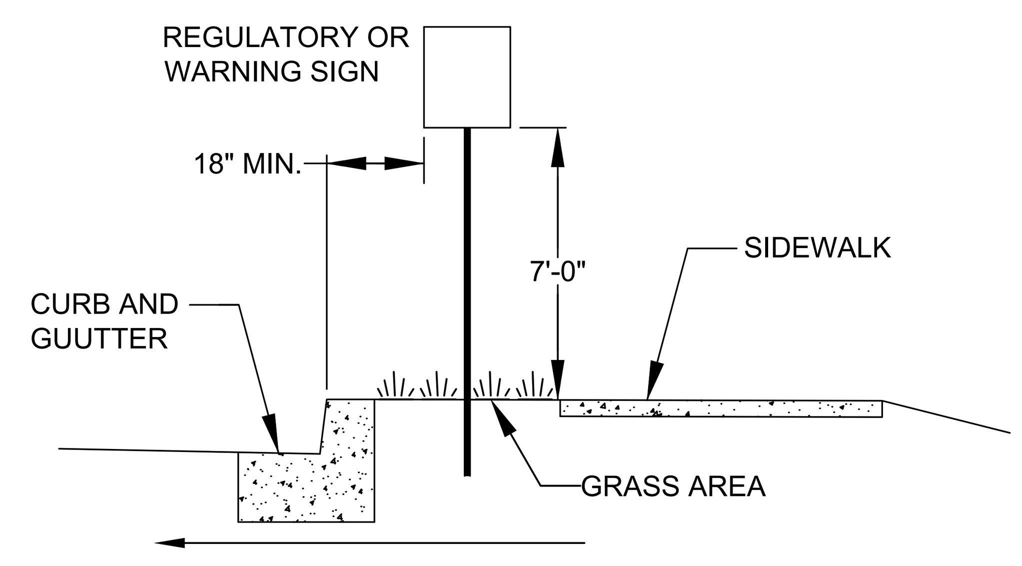

CLOSED SECTION SIGN INSTALLATION WITH SIDEWALK WITH GRASS BUFFER
SCALE: NONE

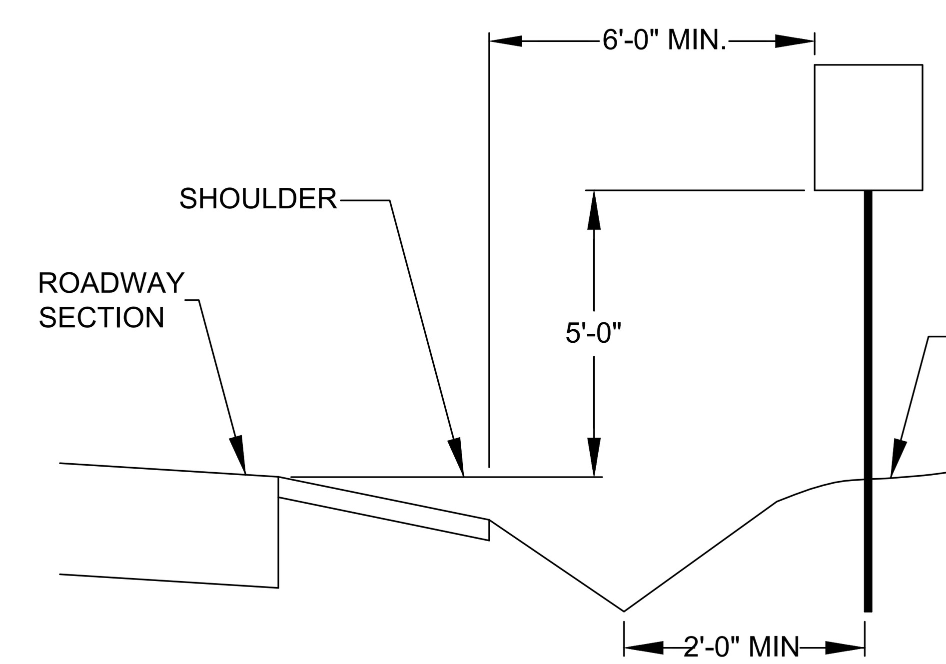

OPEN SECTION SIGN INSTALLATION
SCALE: NONE

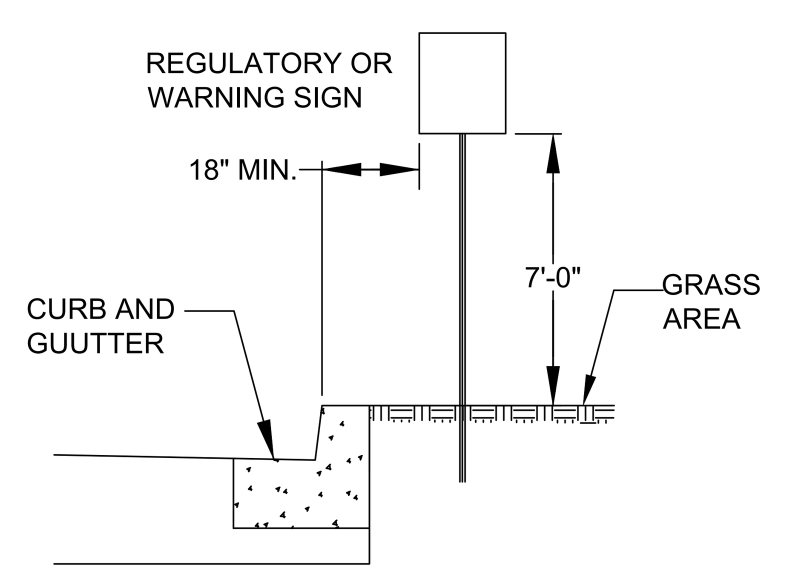

CLOSED SECTION SIGN INSTALLATION WITHOUT SIDEWALK
SCALE: NONE

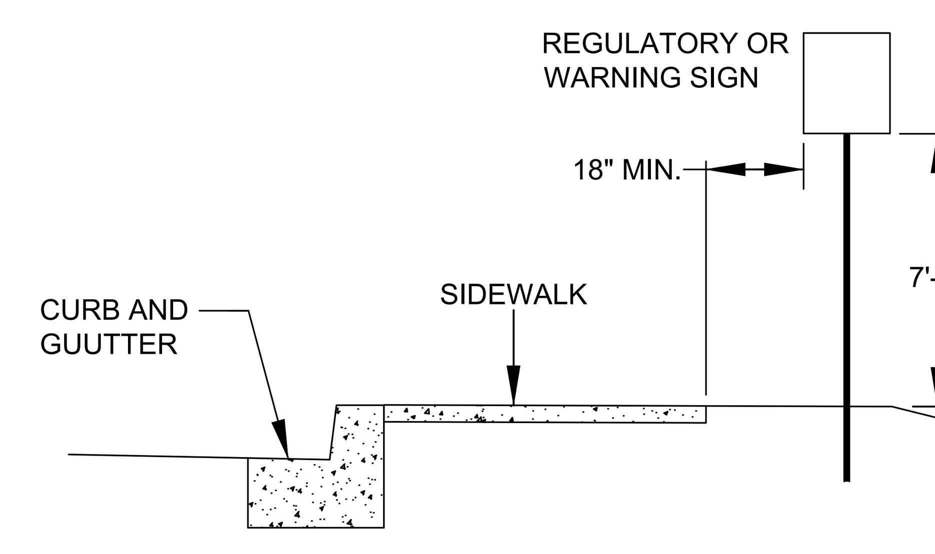

CLOSED SECTION SIGN INSTALLATION WITH SIDEWALK WITHOUT GRASS BUFFER
SCALE: NONE

LEGEND

PROPOSED ONE POST SIGN
PROPOSED TWO POST SIGN
(Y) 5" SINGLE YELLOW LINE
(DY) 5" DOUBLE YELLOW LINE
(CW) CROSS WALK
(S) 24" STOP BAR
(AL) LEFT TURN LANE - USE ARROW
(AR) RIGHT TURN LANE - USE ARROW
(W-5") 5" SINGLE WHITE LINE
(W-10") 10" SINGLE WHITE LINE
EXISTING GROUND SIGN TO REMAIN
PROPOSED GROUND SIGN

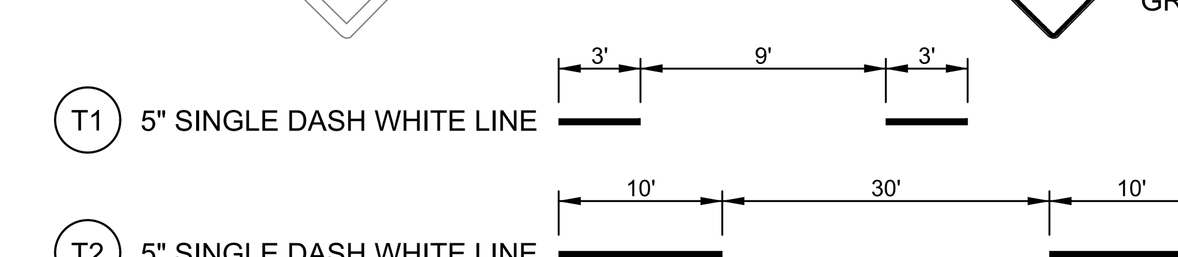

BROKEN LINES
SCALE: NONE

NO.	REVISION DESCRIPTION	BY	DATE

DESIGNED BY: PJM
DRAWN BY: GLJ
CHECKED BY: TP / PJM
DATE: 09-15-22

WASHINGTON COUNTY, MARYLAND
DIVISION OF ENGINEERING
Washington County Administrative Annex. Building
747 Northern Avenue, Hagerstown, Maryland, 21742
Phone: 240-313-2460 Fax: 240-313-2401

INTERSECTION SIGNAL & SIDEWALK IMPROVEMENTS
STOTLER RD. & HALFWAY BLVD.
PAVEMENT MARKING & SIGNAGE DETAILS

STATE OF MARYLAND · PAMELA JEAN MOHN · No. 39252 · PROFESSIONAL ENGINEER · 10.7.22

SCALE 1" = 20'
SECTION NO. PMS - 02
SHEET NO. 32 OF 48
PROJECT NO. 16-045

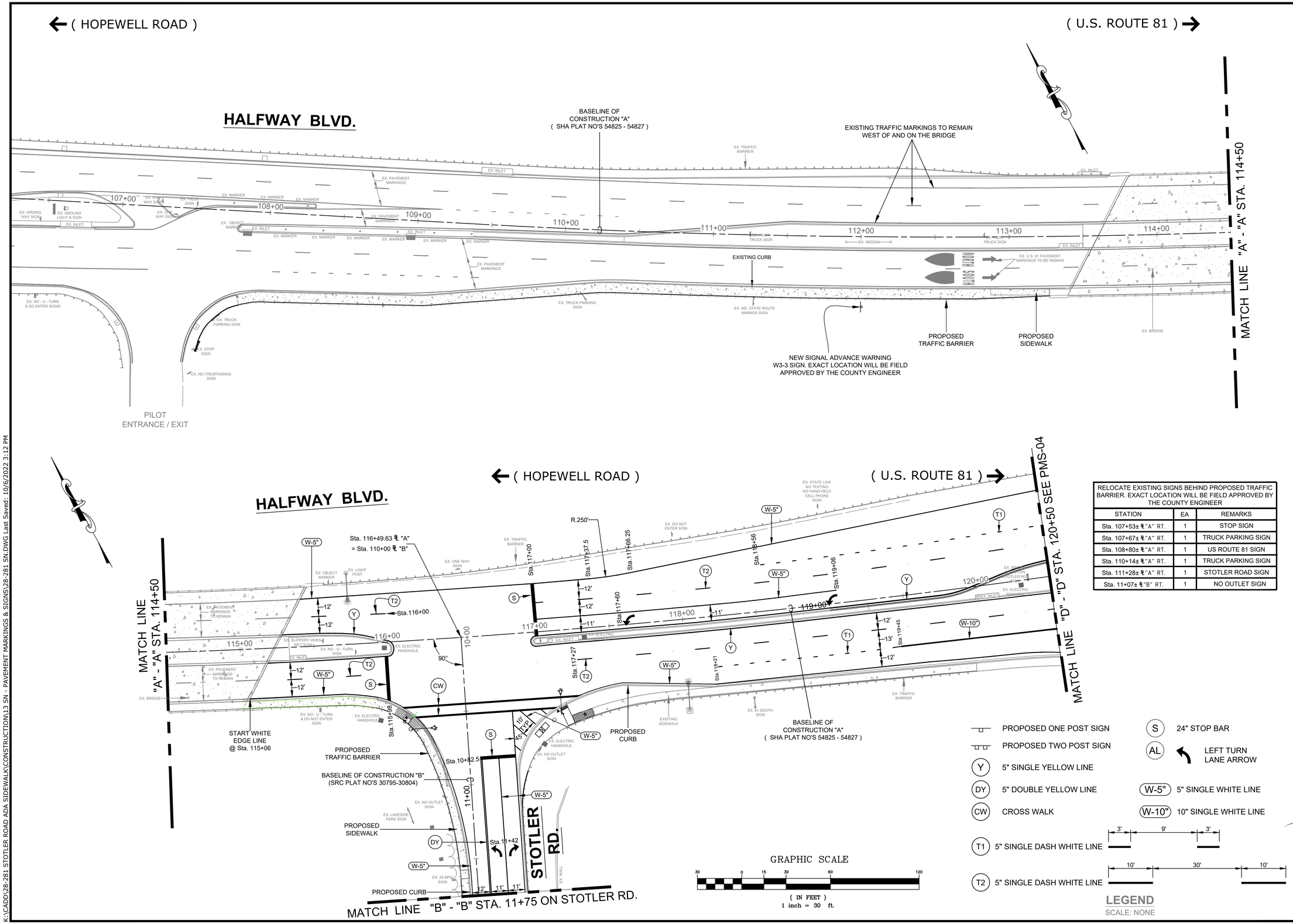

RELOCATE EXISTING SIGNS BEHIND PROPOSED TRAFFIC BARRIER. EXACT LOCATION WILL BE FIELD APPROVED BY THE COUNTY ENGINEER		
STATION	EA	REMARKS
Sta. 107+53± ℄"A" RT.	1	STOP SIGN
Sta. 107+67± ℄"A" RT.	1	TRUCK PARKING SIGN
Sta. 108+80± ℄"A" RT.	1	US ROUTE 81 SIGN
Sta. 110+14± ℄"A" RT.	1	TRUCK PARKING SIGN
Sta. 111+28± ℄"A" RT.	1	STOTLER ROAD SIGN
Sta. 11+07± ℄"B" RT.	1	NO OUTLET SIGN

PROPOSED ONE POST SIGN
PROPOSED TWO POST SIGN
(Y) 5" SINGLE YELLOW LINE
(DY) 5" DOUBLE YELLOW LINE
(CW) CROSS WALK
(S) 24" STOP BAR
(AL) LEFT TURN LANE ARROW
(W-5") 5" SINGLE WHITE LINE
(W-10") 10" SINGLE WHITE LINE
(T1) 5" SINGLE DASH WHITE LINE (3' 9' 3')
(T2) 5" SINGLE DASH WHITE LINE (10' 30' 10')

LEGEND
SCALE: NONE

NO.	REVISION DESCRIPTION	BY	DATE

DESIGNED BY: PJM
DRAWN BY: GLJ
CHECKED BY: PJM
DATE: 09-15-22

WASHINGTON COUNTY, MARYLAND
DIVISION OF ENGINEERING

Washington County Administrative Annex, Building
747 Northern Avenue, Hagerstown, Maryland, 21742
Phone: 240-313-2460 Fax: 240-313-2401

INTERSECTION SIGNAL & SIDEWALK IMPROVEMENTS
STOTLER RD. & HALFWAY BLVD.
PAVEMENT MARKING & SIGNAGE PLAN

STATE OF MARYLAND · PAMELA JEAN HOHN · No. 39251 · PROFESSIONAL ENGINEER · 10.7.22

SCALE 1" = 30'
SECTION NO. PMS - 03
SHEET NO. 33 OF 48
PROJECT NO. 16-045

K:\CADD\28-281 STOTLER ROAD ADA SIDEWALK\CONSTRUCTION\13 SN - PAVEMENT MARKINGS & SIGNS\28-281 SN.DWG Last Saved: 10/6/2022 3:12 PM

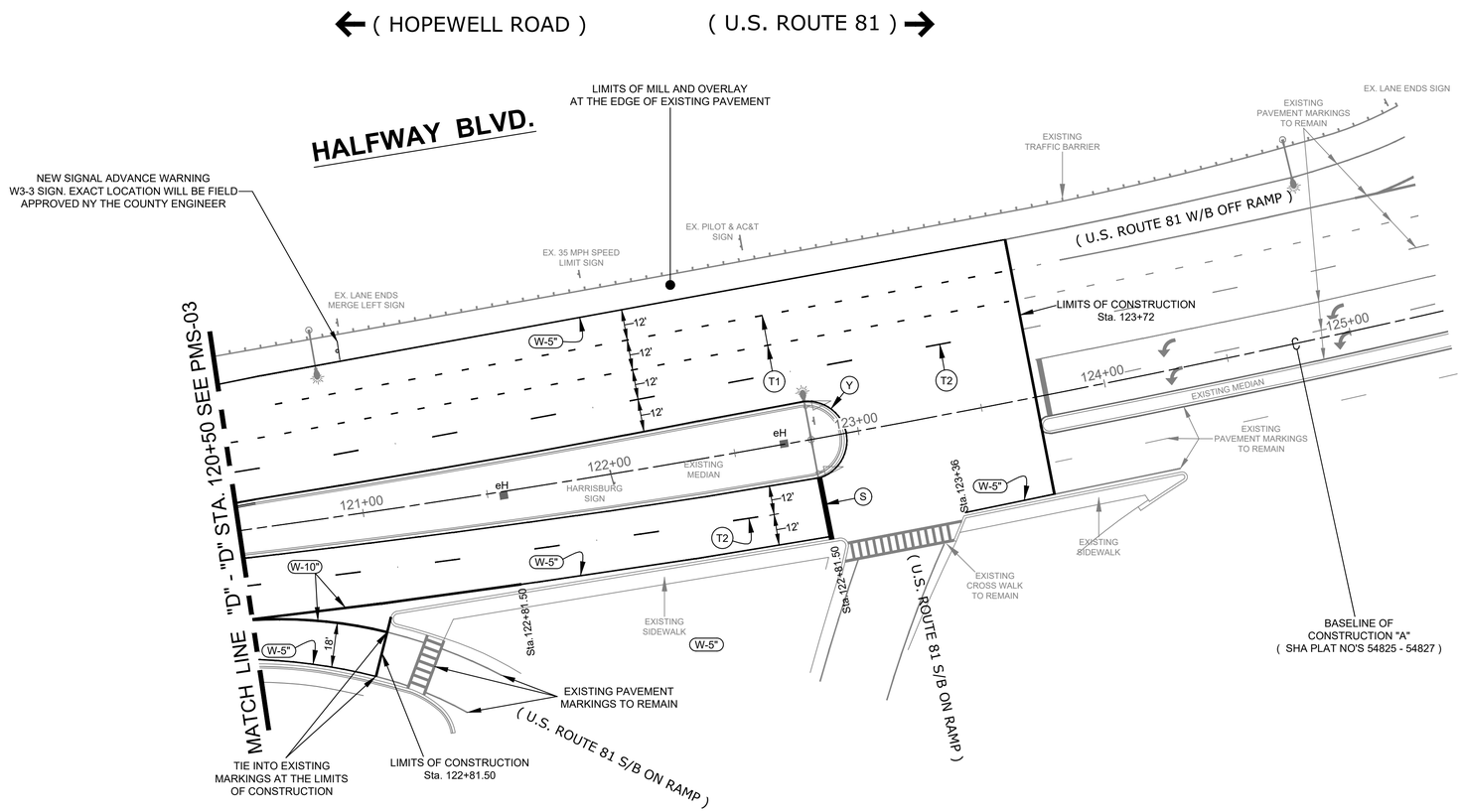

PROPOSED ONE POST SIGN

PROPOSED TWO POST SIGN

Y — 5" SINGLE YELLOW LINE

DY — 5" DOUBLE YELLOW LINE

CW — CROSS WALK

T1 — 5" SINGLE DASH WHITE LINE (3' / 9' / 3')

T2 — 5" SINGLE DASH WHITE LINE (10' / 30' / 10')

S — 24" STOP BAR

AL — LEFT TURN LANE ARROW

W-5" — 5" SINGLE WHITE LINE

W-10" — 10" SINGLE WHITE LINE

LEGEND

SCALE: NONE

GRAPHIC SCALE

30 0 15 30 60 120

(IN FEET)
1 inch = 30 ft.

NO.	REVISION DESCRIPTION	BY	DATE

DESIGNED BY: PJM
DRAWN BY: GLJ
CHECKED BY: PJM
DATE: 09-15-22

WASHINGTON COUNTY, MARYLAND
DIVISION OF ENGINEERING

Washington County Administrative Annex, Building
747 Northern Avenue, Hagerstown, Maryland, 21742
Phone: 240-313-2460 Fax: 240-313-2401

INTERSECTION SIGNAL &
SIDEWALK IMPROVEMENTS
STOTLER RD. & HALFWAY BLVD.
PAVEMENT MARKING & SIGNAGE PLAN

STATE OF MARYLAND
PAMELA JEAN MOHN
No. 39253
PROFESSIONAL ENGINEER
10.7.22

SCALE
1" = 30'

SECTION NO.
PMS - 04

SHEET NO.
34 OF 48

PROJECT NO.
16-045

K:\CADD\28-281 STOTLER ROAD ADA SIDEWALK\CONSTRUCTION\13 SN - PAVEMENT MARKINGS & SIGNS\28-281 SN.DWG Last Saved: 10/5/2022 1:52 PM

EXISTING SIGN AND POST TO BE REMOVE	
STATION	QTY.
Sta. 23+25± RIGHT - OBJECT MARKER SIGN AND POST	1

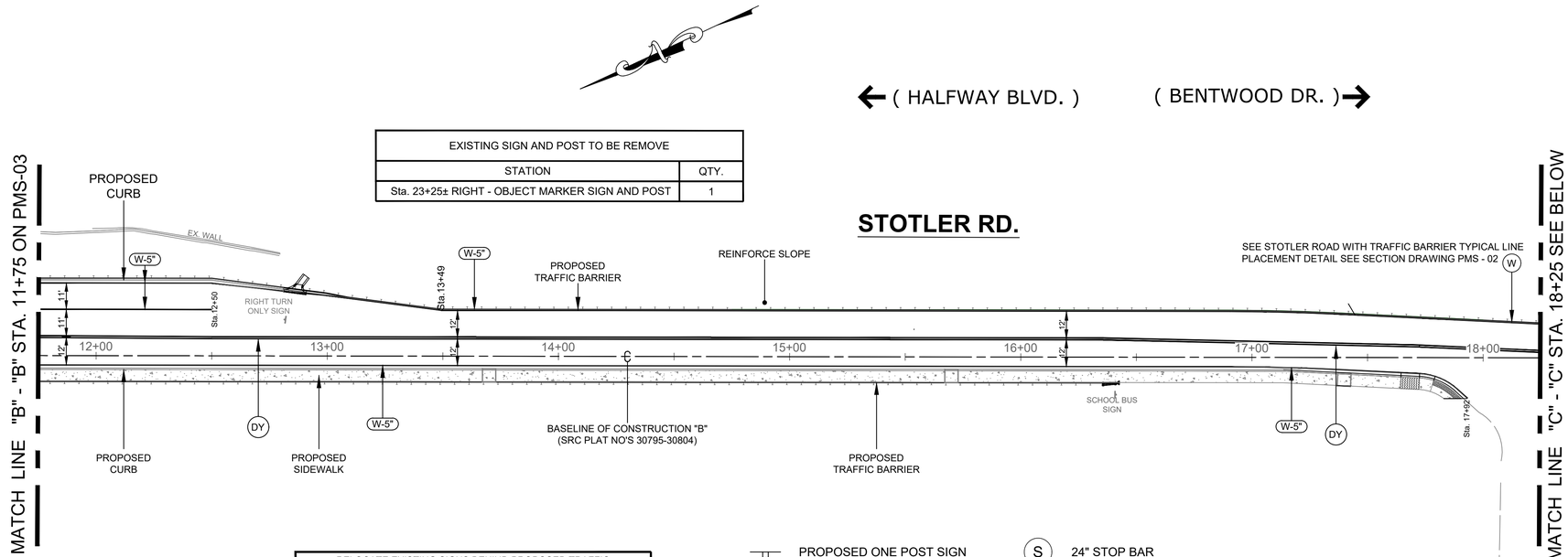

RELOCATE EXISTING SIGNS BEHIND PROPOSED TRAFFIC BARRIER / SIDEWALK. EXACT LOCATION WILL BE FIELD APPROVED BY THE COUNTY ENGINEER		
STATION	EA	REMARKS
Sta. 12+82± ℄"B" LT.	1	RIGHT TURN ONLY SIGN
Sta. 16+41± ℄"B" RT.	1	SCHOOL BUS SIGN
Sta. 21+07± ℄"B" RT.	1	INTERSECTION WARNING SIGN
Sta. 21+91± ℄"B" RT.	1	TRUCK PROHIBITIVE SIGN

PROPOSED ONE POST SIGN

PROPOSED TWO POST SIGN

Y — 5" SINGLE YELLOW LINE

DY — 5" DOUBLE YELLOW LINE

CW — CROSS WALK

T1 — 5" SINGLE DASH WHITE LINE (3' / 9' / 3')

T2 — 5" SINGLE DASH WHITE LINE (10' / 30' / 10')

S — 24" STOP BAR

AL — LEFT TURN LANE ARROW

W-5" — 5" SINGLE WHITE LINE

W-10" — 10" SINGLE WHITE LINE

LEGEND

SCALE: NONE

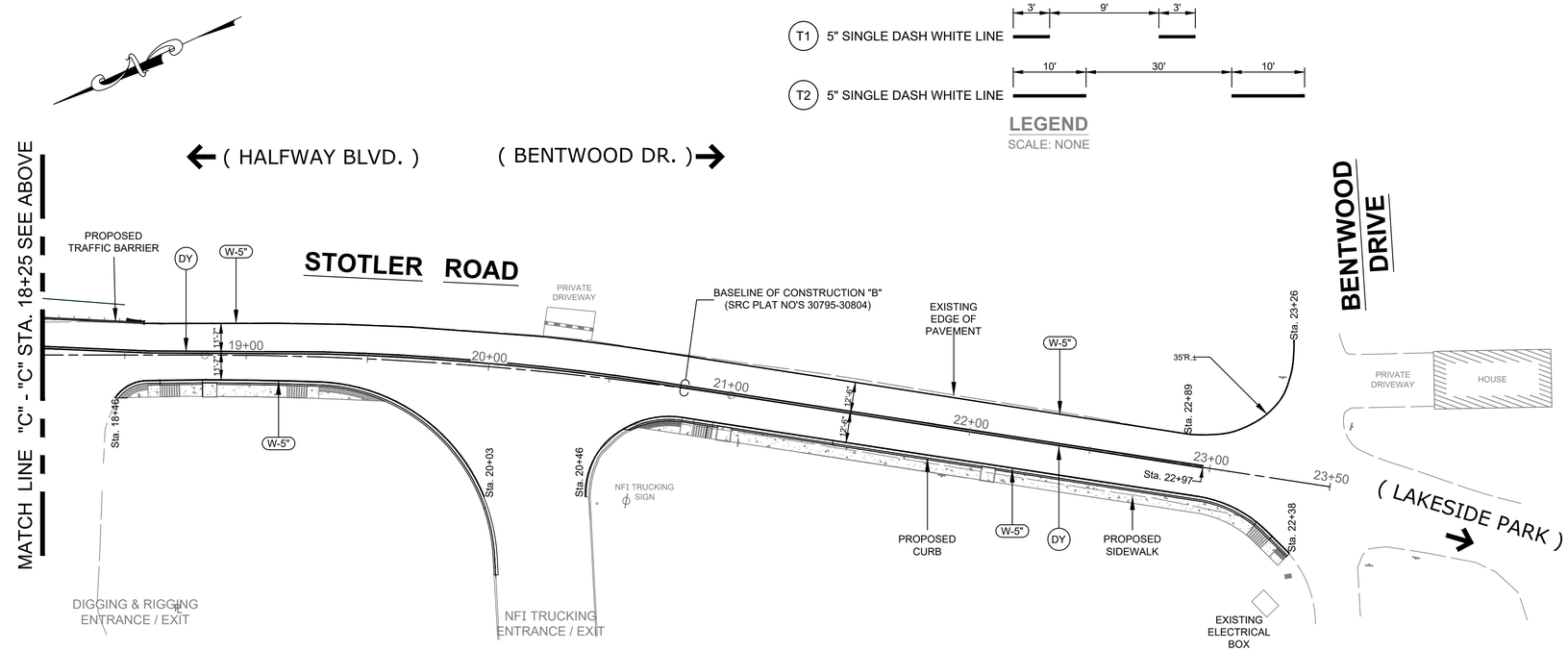

GRAPHIC SCALE

30 0 15 30 60 120

(IN FEET)
1 inch = 30 ft.

NO.	REVISION DESCRIPTION	BY	DATE

DESIGNED BY: PJM
DRAWN BY: GLJ
CHECKED BY: PJM
DATE: 09-15-22

WASHINGTON COUNTY, MARYLAND
DIVISION OF ENGINEERING

Washington County Administrative Annex Building
747 Northern Avenue, Hagerstown, Maryland, 21742
Phone: 240-313-2460 Fax: 240-313-2401

INTERSECTION SIGNAL & SIDEWALK IMPROVEMENTS
STOTLER RD. & HALFWAY BLVD.
PAVEMENT MARKING & SIGNAGE PLAN

STATE OF MARYLAND
PAMELA JEAN MOHN
PROFESSIONAL ENGINEER
No. 29172
10.7.22

SCALE	1" = 30'
SECTION NO.	PMS - 05
SHEET NO.	35 OF 48
PROJECT NO.	16-045

K:\CADD\28-281 STOTLER ROAD ADA SIDEWALK\CONSTRUCTION\13 SN - PAVEMENT MARKINGS & SIGNS\28-281 SN.DWG Last Saved: 10/5/2022 1:52 PM

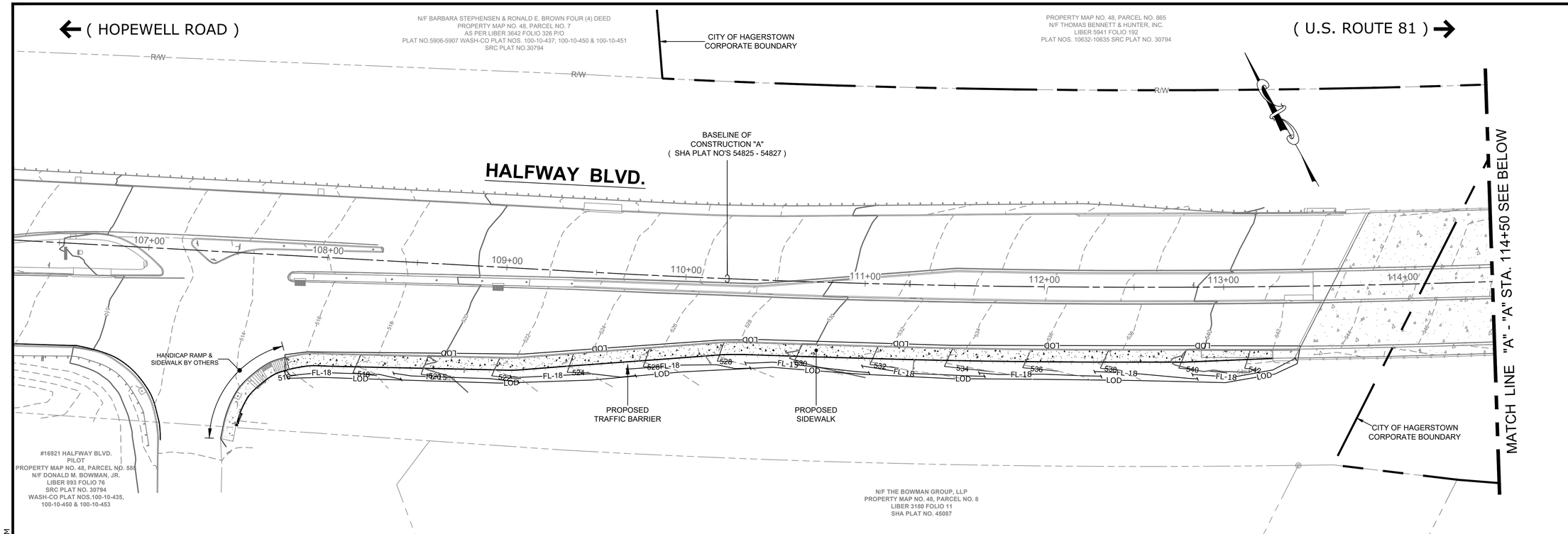

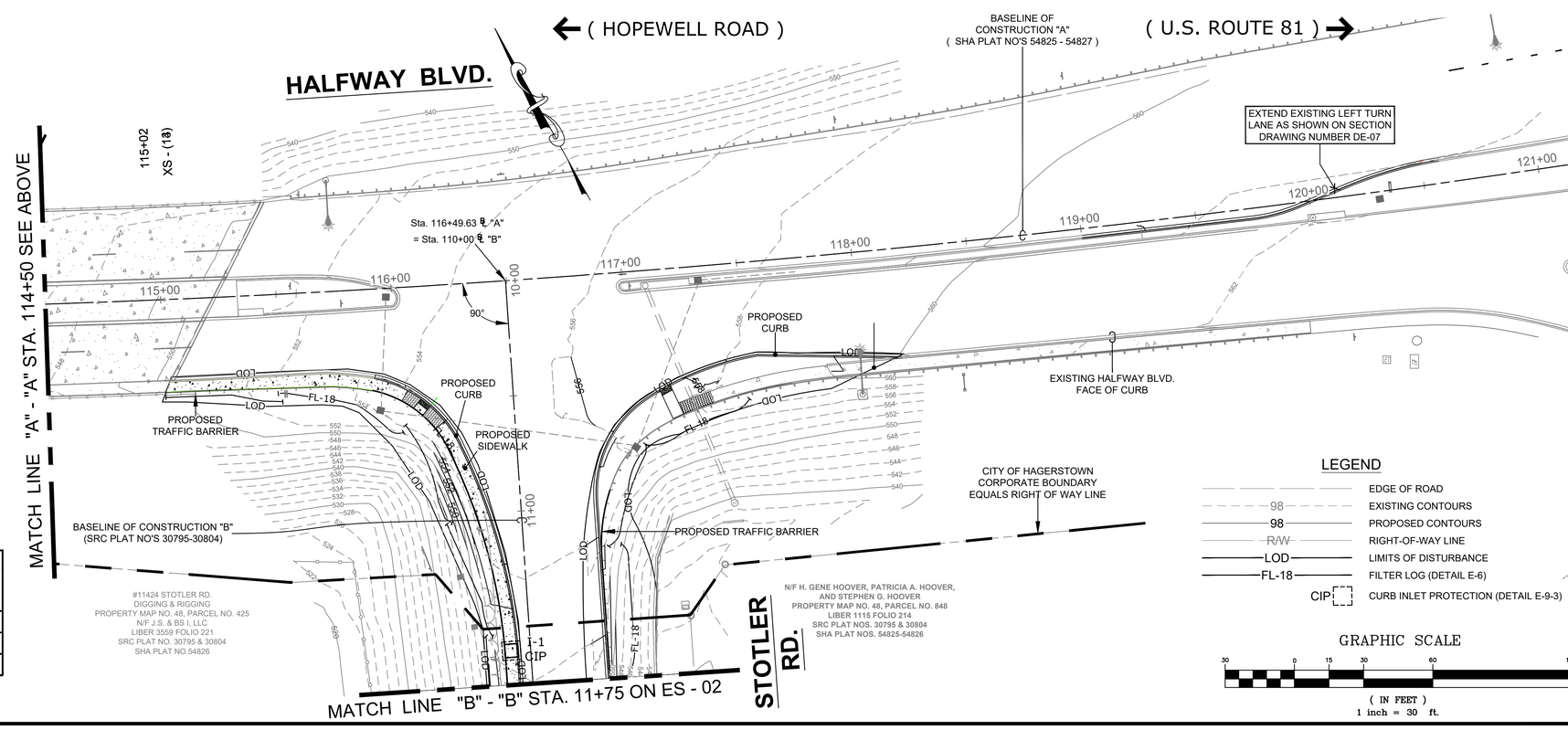

OUTLET PROTECTION		
MODIFIED - SHA 374.68 INLET 5' COG OPENING L = 6'-0 W = 6'-0	Q10 (cfs)	V10 (fps)
INLET I-1 BASELINE "B" STATION 11+60 RT. USE: TSSM B-4-6-B	0.18	2.6

CURB INLET PROTECTION			CIP
STATION	AREA (AC)	EA	LOCATION
(INLET - 1) STA. 11+60 ℄ "B"	0.035	1	RIGHT

FILTER LOG	FL-18	AVERAGE SLOPE
STATION	LF	
STA. 107+80 ℄ "A" RIGHT TO STA. 113+40 ℄ "A" RIGHT	567	14:1
STA. 115+00 ℄ "A" RIGHT TO STA. 11+75 ℄ "B" RIGHT	229	4:1
STA. 11+75 ℄ "B" LEFT TO STA. 118+29 ℄ "A" RIGHT	237	15:1

NOTE: FL TO BE SET IN 50' & 65' LENGTHS PER SLOPE

LEGEND

- EDGE OF ROAD
- 98 EXISTING CONTOURS
- 98 PROPOSED CONTOURS
- R/W RIGHT-OF-WAY LINE
- LOD LIMITS OF DISTURBANCE
- FL-18 FILTER LOG (DETAIL E-6)
- CIP CURB INLET PROTECTION (DETAIL E-9-3)

GRAPHIC SCALE

30 0 15 30 60 120

(IN FEET)
1 inch = 30 ft.

NO.	REVISION DESCRIPTION	BY	DATE

DESIGNED BY: PJM
DRAWN BY: GLJ
CHECKED BY: PJM
DATE: 09-15-22

WASHINGTON COUNTY, MARYLAND
DIVISION OF ENGINEERING

Washington County Administrative Annex, Building
80 W. Baltimore St., Hagerstown, MD 21742
Phone: 240-313-2460 Fax: 240-313-2401

INTERSECTION SIGNAL &
SIDEWALK IMPROVEMENTS
STOTLER RD. & HALFWAY BLVD.
EROSION & SEDIMENT CONTROL

STATE OF MARYLAND
PAMELA JEAN HORN
No. 39257
PROFESSIONAL ENGINEER
10.7.22

SCALE
1" = 30'

SECTION NO.
ES - 01

SHEET NO.
36 OF 48

PROJECT NO.
16-045

K:\CADD\28-281 STOTLER ROAD ADA SIDEWALK\CONSTRUCTION\9 ES - EROSION & SEDIMENT CONTROL\28-281 ES.DWG Last Saved: 10/5/2022 1:58 PM

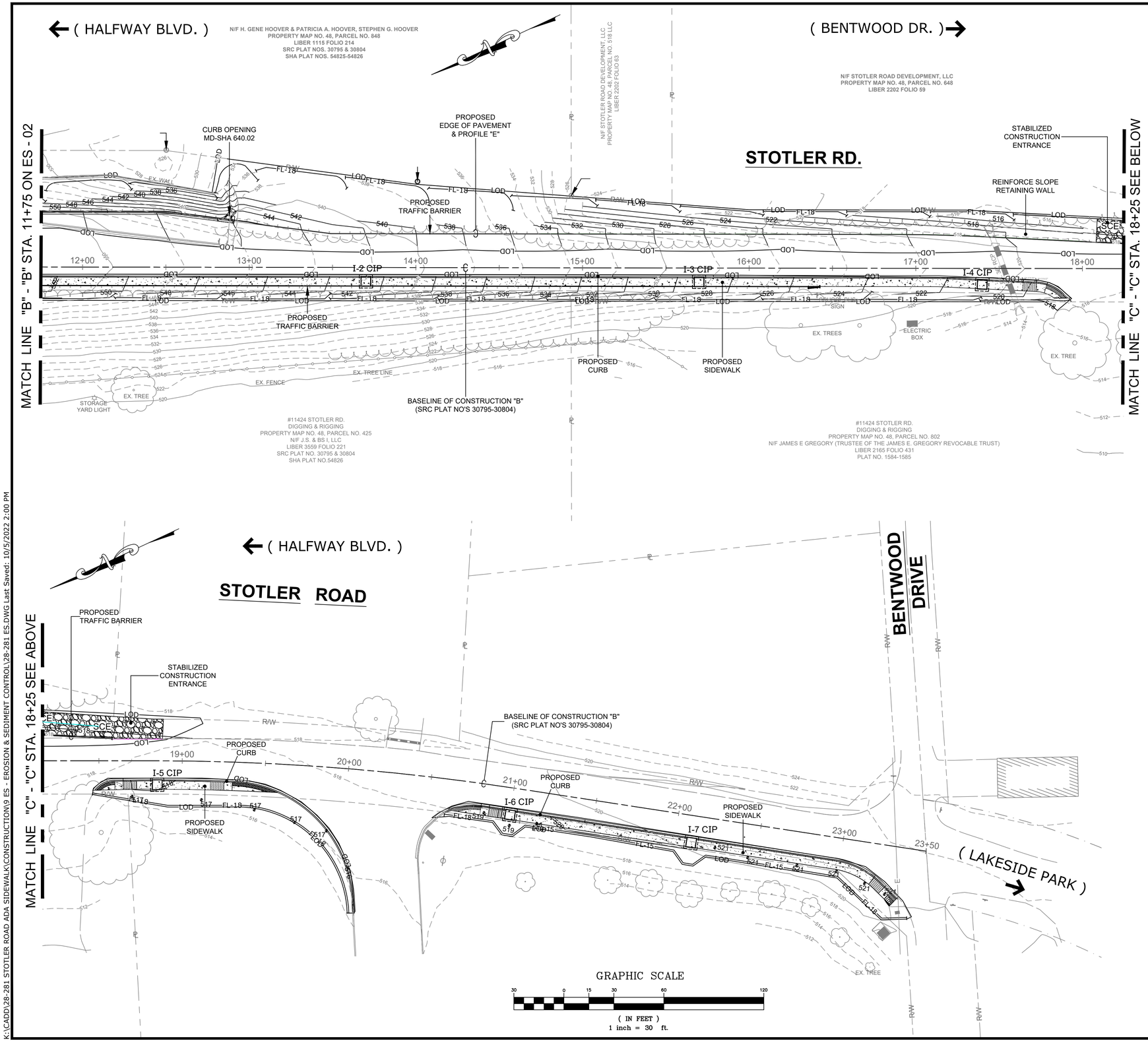

STABILIZED CONSTRUCTION ENTRANCE	SCE
STATION	
STA. 18+73 ℄ "B" LEFT	

FILTER LOG	FL-18	AVERAGE SLOPE
STATION	LF	
STA. 11+75 ℄ "B" LEFT TO STA. 14+75 ℄ "B" LEFT	323	2:1
STA. 14+75 ℄ "B" LEFT TO STA. 18+00 ℄ "B" LEFT	327	1.5:1
STA. 18+00 ℄ "B" LEFT TO STA. 19+11 ℄ "B" LEFT	113	2:1
STA. 11+75 ℄ "B" RIGHT TO STA. 17+85 ℄ "B" RIGHT	613	14:1
STA. 18+46 ℄ "B" RIGHT TO STA. 20+08 ℄ "B" RIGHT	191	20:1
STA. 20+60 ℄ "B" RIGHT TO STA. 23+45 ℄ "B" RIGHT	302	20:1

NOTE: FL TO BE SET IN 50' & 65' LENGTHS PER SLOPE

CURB INLET PROTECTION			CIP
STATION	AREA (AC)	EA	LOCATION
(INLET - 2) STA. 13+70 ℄ "B"	0.055	1	RIGHT
(INLET - 3) STA. 15+70 ℄ "B"	0.053	1	RIGHT
(INLET - 4) STA. 17+40 ℄ "B"	0.053	1	RIGHT
(INLET - 5) STA. 18+85 ℄ "B"	0.032	1	RIGHT
(INLET - 6) STA. 21+00 ℄ "B"	0.049	1	RIGHT
(INLET - 7) STA. 22+10 ℄ "B"	0.049	1	RIGHT

OUTLET PROTECTION		
MODIFIED - SHA 374.68 INLET 5' COG OPENING L = 6'-0 W = 6'-0	Q10 (cfs)	V10 (fps)
INLET I-2 BASELINE "B" STATION 13+70 RT. USE: TSSM B-4-6-B	0.23	3.6
INLET I-3 BASELINE "B" STATION 15+70 RT. USE: TSSM B-4-6-B	0.26	3.8
INLET I-4 BASELINE "B" STATION 17+40 RT. USE: TSSM B-4-6-B	0.31	3.4
INLET I-5 BASELINE "B" STATION 18+85 RT. USE: TSSM B-4-6-B	0.31	2.2
INLET I-6 BASELINE "B" STATION 21+00 RT. USE: TSSM B-4-6-B	0.27	2.6
INLET I-7 BASELINE "B" STATION 22+10 RT. USE: TSSM B-4-6-B	0.24	2.5
EX 36" RCP WITH STABILE GRASS OUTFALL * DO NOT DISTURB OUTFALL	15	7
MD-SHA 640.02 CURB OPENING BASELINE "B" STATION 12+86 LT. USE: TSSM B-4-6-B	1.08	9

LEGEND

- STABILIZED CONSTRUCTION ENTRANCE (DETAIL B-1)
- EDGE OF ROAD
- 98 — EXISTING CONTOURS
- 98 — PROPOSED CONTOURS
- RIGHT-OF-WAY LINE
- LOD — LIMITS OF DISTURBANCE
- FL-18 — FILTER LOG (DETAIL E-6)
- CIP — CURB INLET PROTECTION (DETAIL E-9-3)

NO.	REVISION DESCRIPTION	BY	DATE

DESIGNED BY: PJM
DRAWN BY: GLJ
CHECKED BY: PJM
DATE: 09-15-22

WASHINGTON COUNTY, MARYLAND
DIVISION OF ENGINEERING

Washington County Administrative Annex. Building
80 W. Baltimore St., Hagerstown, MD 21742
Phone: 240-313-2460 Fax: 240-313-2401

INTERSECTION SIGNAL & SIDEWALK IMPROVEMENTS
STOTLER RD. & HALFWAY BLVD.
EROSION & SEDIMENT CONTROL

STATE OF MARYLAND PAMELA JEAN MOONEY No. 39952 PROFESSIONAL ENGINEER
10.7.22

SCALE 1" = 30'
SECTION NO. ES - 02
SHEET NO. 37 OF 48
PROJECT NO. 16-045

K:\CADD\28-281 STOTLER ROAD ADA SIDEWALK\CONSTRUCTION\9 ES - EROSION & SEDIMENT CONTROL\28-281 ES.DWG Last Saved: 10/5/2022 2:00 PM

SEQUENCE OF CONSTRUCTION:

1. NOTIFY THE WASHINGTON COUNTY SOIL CONSERVATION DISTRICT AT 301-797-6821, EXT. 3, AND THE WASHINGTON COUNTY DIVISION OF ENGINEERING AT 240-313-2460 AT LEAST FIVE (5) DAYS BEFORE CONSTRUCTION BEGINS TO SCHEDULE A PRE-CONSTRUCTION MEETING. A COPY OF THE CONTRACTOR'S SCHEDULE SHALL BE PROVIDED TO WASHINGTON COUNTY PRIOR TO THE START OF CONSTRUCTION.
2. THE CONTRACTOR IS TO NOTIFY MISS UTILITY AT 1-800-257-7777 A MINIMUM OF 3 WORKING DAYS PRIOR TO THE START OF CONSTRUCTION.
3. INSTALL TRAFFIC CONTROL DEVICES PER THE MOT PLANNED PHASING. WORK IS TO BEGIN WITH THE HALFWAY BOULEVARD SIDEWALK. INSTALL FILTER LOG, CLEAR AND GRUB ONLY THOSE AREAS NECESSARY FOR COMPLETION OF THE WORK. ALL UNUSED EXCAVATED MATERIAL MUST BE REMOVED FROM THE SITE AND MUST BE TAKEN TO A LOCATION THAT HAS A CURRENT, APPROVED SOIL EROSION CONTROL PLAN.
4. COMPLETE SIDEWALK, GRADE AND STABILIZE SLOPE.
5. SHIFT TRAFFIC CONTROL FOR THE REMAINING WORK ON HALFWAY BOULEVARD (CONCRETE ISLAND REMOVAL, EXTENSION OF LEFT TURN LANE, CONDUIT AND FOUNDATION WORK FOR TRAFFIC SIGNAL).
6. INSTALL STABILIZED CONSTRUCTION ENTRANCE ALONG THE EAST SIDE OF STOTLER ROAD AND ALL REMAINING FILTER LOGS.
7. BEGIN WORK TO WIDEN THE ROADWAY ON THE EAST SIDE OF STOTLER ROAD STARTING AT THE HALFWAY INTERSECTION AND WORKING TOWARDS BENTWOOD DRIVE. CLEAR AND REMOVE TREES ONLY AS NECESSARY FOR COMPLETION OF THE WORK.
8. IN AREAS WHERE SLOPE EXCEEDS 2:1, USE SOIL REINFORCEMENT GEOGRID. STABILIZE THE SLOPES WITH NORTH AMERICAN GREEN C350 TURF REINFORCEMENT MAT (OR APPROVED EQUAL) AND SEED.
9. ACCESS TO THE RESIDENTS AND COMMERCIAL PROPERTIES OFF OF STOTLER ROAD MUST BE MAINTAINED AT ALL TIMES.
10. INSTALL EAST SIDE TRAFFIC BARRIER.
11. SWITCH TRAFFIC CONTROL ONCE THE ROADWAY HAS BEEN WIDENED AND WORK IS COMPLETE ON THE PLACE GAB AND COMPACT PROPOSED ROADWAY EAST OF THE BRIDGE. REDIRECT RESIDENTIAL TRAFFIC OVER NEW ROADWAY.
12. SAW CUT THE ROAD AND EXCAVATE FOR PLACEMENT OF THE CURB AND SIDEWALK. INSTALL OPEN BACK INLETS AND PROVIDE INLET PROTECTION. REMOVE EAND RESET TRAFFIC BARRIER.
13. REMOVE EXISTING TRAFFIC BARRIER, GRADE, INSTALL STABILIZATION MATTING, SEED THE EXPOSED AREAS AND SET TRAFFIC BARRIER AND SIGNS.
14. NOTIFY WCDE AND WCSCD FIVE DAYS PRIOR TO FINAL INSPECTION. WHEN STABILIZATION IS APPROVED BY WCSCD REMOVE ALL EROSION AND SEDIMENT CONTROL DEVICES.

SOIL EROSION, SEDIMENT CONTROL & SEEDING NOTES

1. ALL SOIL EROSION/SEDIMENT CONTROL MEASURES SHALL COMPLY WITH THE "2011 MARYLAND STANDARDS AND SPECIFICATIONS FOR SOIL EROSION AND SEDIMENT CONTROL" AND THE PROVISIONS OF THE APPROVED PLAN.

2. ALL GRADING AND STABILIZATION SHALL COMPLY WITH THE "2011 MARYLAND STANDARDS AND SPECIFICATIONS FOR SOIL EROSION AND SEDIMENT CONTROL", "SECTION B - GRADING AND STABILIZATION" AND THE PROVISIONS OF THE APPROVED PLAN.

3. ALL SOIL EROSION AND SEDIMENT CONTROL PRACTICES (BMP'S) ARE TO BE CONSTRUCTED AND/OR INSTALLED PRIOR TO OR AT THE INITIATION OF GRADING IN ACCORDANCE WITH "2011 MARYLAND STANDARDS AND SPECIFICATIONS FOR SOIL EROSION AND SEDIMENT CONTROL", AND THE APPROVED PLAN.

4. A GRADING UNIT IS THE MAXIMUM CONTIGUOUS AREA ALLOWED TO BE GRADED AT A GIVEN TIME AND IS LIMITED TO 20 ACRES. WORK MAY PROCEED TO A SUBSEQUENT GRADING UNIT WHEN AT LEAST 50 PERCENT OF THE DISTURBED AREA IN THE PRECEDING GRADING UNIT HAS BEEN STABILIZED AND APPROVED BY THE ENFORCEMENT AUTHORITY AND/OR THE WASHINGTON COUNTY SOIL CONSERVATION DISTRICT (APPROVAL AUTHORITY). UNLESS OTHERWISE SPECIFIED AND APPROVED BY THE APPROVAL AUTHORITY, NO MORE THAN 30 ACRES CUMULATIVELY MAY BE DISTURBED AT A GIVEN TIME.

5. FOR INITIAL SOIL DISTURBANCE OR RE-DISTURBANCE, TEMPORARY OR PERMANENT STABILIZATION MUST BE COMPLETED WITHIN:

a. THREE (3) CALENDAR DAYS AS TO THE SURFACE OF ALL PERIMETER DIKES, SWALES, DITCHES, PERIMETER SLOPES, AND ALL SLOPES STEEPER THAN 3:1 HORIZONTAL TO VERTICAL (3:1)
b. SEVEN (7) CALENDAR DAYS AS TO ALL OTHER DISTURBED OR GRADED AREAS ON THE PROJECT SITE NOT UNDER ACTIVE GRADING.

6. STOCKPILES MUST BE STABILIZED IN ACCORDANCE WITHIN THE 7 DAY STABILIZATION REQUIREMENT, AS WELL AS, STANDARD B-4-1 INCREMENTAL STABILIZATION AND STANDARD B-4-4 TEMPORARY STABILIZATION (AS APPLICABLE).

7. ALL CONSTRUCTED CHANNELS AND SWALES SHALL HAVE SPECIFIED TREATMENT INSTALLED TO THE DESIGN FLOW DEPTH COMPLETED DOWNSTREAM TO UPSTREAM AS CONSTRUCTION PROGRESSES. AN INSTALLATION DETAIL SHALL BE SHOWN ON THE PLANS.

8. ALL STORM DRAIN AND SANITARY SEWER LINES NOT IN PAVED AREAS ARE TO BE MULCHED AND SEEDED WITHIN 3 DAYS OF INITIAL BACKFILL UNLESS OTHERWISE SPECIFIED ON PLANS.

9. ELECTRIC POWER, TELEPHONE, AND GAS LINES ARE TO BE COMPACTED, SEEDED, AND MULCHED WITHIN 3 DAYS AFTER INITIAL BACKFILL UNLESS OTHERWISE SPECIFIED ON PLANS.

10. NO SLOPE SHALL BE GREATER THAN 2:1.

11. AS REQUIRED BY SECTION B, OF THE MARYLAND STANDARDS AND SPECIFICATIONS FOR SOIL EROSION AND SEDIMENT CONTROL, "ADEQUATE VEGETATIVE STABILIZATION", IS DEFINED AS 95 PERCENT GROUND COVER. THE WASHINGTON COUNTY SOIL CONSERVATION DISTRICT REQUIRES THE PROJECT ADHERE TO THIS FOR SCHEDULING OF THE FINAL SITE CLOSEOUT REVIEW, AND/OR RELEASE OF THE SITE FOR SOIL EROSION AND SEDIMENT CONTROL.

FOR SITES 1.0 ACRE OR MORE, THE FOLLOWING ARE REQUIRED:

1. MARYLAND DEPARTMENT OF THE ENVIRONMENT, GENERAL PERMIT FOR STORMWATER ASSOCIATED WITH A CONSTRUCTION ACTIVITY, NPDES PERMIT NUMBER MDRC, STATE DISCHARGE PERMIT NUMBER 14GP, OR AN INDIVIDUAL PERMIT.

2. THE MARYLAND DEPARTMENT OF THE ENVIRONMENT: (GENERAL/INDIVIDUAL PERMIT - NOTICE OF INTENT- NOI) APPLICATION AND PERMIT SHALL BE POSTED AND/OR AVAILABLE ON-SITE AT ALL TIMES.

3. DURING CONSTRUCTION, ALL SOIL EROSION AND SEDIMENT CONTROL PRACTICES (BMP'S) SHALL BE INSPECTED AND RECORDED ON THE "STANDARD INSPECTION FORM", "GENERAL PERMIT FOR STORMWATER ASSOCIATED WITH CONSTRUCTION ACTIVITY" PER THE MARYLAND DEPARTMENT OF THE ENVIRONMENT (GENERAL/INDIVIDUAL PERMIT - NOTICE OF INTENT - NOI).

4. FOLLOWING CONSTRUCTION AND RELEASE OF THE SIGHT FOR SOIL EROSION AND SEDIMENT CONTROL BY THE WASHINGTON COUNTY SOIL CONSERVATION DISTRICT, I.E., ALL PORTIONS OF A SITE HAVE BEEN PERMANENTLY STABILIZED, AND ALL STORMWATER DISCHARGES FROM CONSTRUCTION SITES THAT ARE AUTHORIZED BY THE PERMIT ARE ELIMINATED, THE AUTHORIZED PERMITTEE SHALL SUBMIT THE MARYLAND DEPARTMENT OF THE ENVIRONMENT, GENERAL/INDIVIDUAL PERMIT - NOTICE OF TERMINATION-NOT.

TEMPORARY SEEDING SUMMARY

HARDINESS ZONE (FIGURE B.3): 6a & 6b SEED MIXTURE (TABLE B.1)					FERTILIZER RATE (10-20-20)	LIME RATE
NO.	SPECIES	APPLICATION RATE (lb/ac)	SEEDING DATES	SEEDING DEPTHS		
1	Barley	96	Zone 6a: Mar 15-May 31 / Aug 1-Sept 30 Zone 6b: Mar 01-May 15 / Aug 1-Oct 15	1"	436 lb/ac. (10 lb/1000 s.f.)	2 tons/ac. (90 lb/1000 s.f.)

PERMANENT SEEDING SUMMARY

HARDINESS ZONE (FIGURE B.3): 6a & 6b SEED MIXTURE (TABLE B.1)					FERTILIZER RATE (10-20-20)			LIME RATE
NO.	SPECIES	APPLICATION RATE (lb/ac)	SEEDING DATES	SEEDING DEPTH	N	P205	K20	
6	Tall Fescue	40	Zone 6a: Mar 15-May 31 / Jun 1-Jun 15 Zone 6b: Mar 1-May 15 / Aug 15-Oct 15	1/4"-1/2"	45 lb/ac. (1 lb/1000 s.f.)	90 lb/ac. (2 lb/1000 s.f.)	90 lb/ac. (2 lb/1000 s.f.)	2 tons/ac. (90 lb/1000 s.f.)
	Perennial Ryegrass	25						
	White Clover	5						

NO.	REVISION DESCRIPTION	BY	DATE

DESIGNED BY: PJM
DRAWN BY: GLJ
CHECKED BY: PJM
DATE: 09-15-22

WASHINGTON COUNTY, MARYLAND
DIVISION OF ENGINEERING

Washington County Administrative Annex, Building
80 W. Baltimore St., Hagerstown, MD 21742
Phone: 240-313-2460 Fax: 240-313-2401

INTERSECTION SIGNAL & SIDEWALK IMPROVEMENTS
STOTLER RD. & HALFWAY BLVD.
EROSION & SEDIMENT CONTROL NOTES

STATE OF MARYLAND
PAMELA JEAN MOON
No. 39252
PROFESSIONAL ENGINEER
10.7.22

SCALE
1" = 30'

SECTION NO.
ES - 03

SHEET NO.
38 OF 48

PROJECT NO.
16-045

K:\CADD\28-281 STOTLER ROAD ADA SIDEWALK\CONSTRUCTION\9 ES - EROSION & SEDIMENT CONTROL\28-281 ES.DWG Last Saved: 10/5/2022 2:02 PM

DETAIL B-1 STABILIZED CONSTRUCTION ENTRANCE

STANDARD SYMBOL
SCE

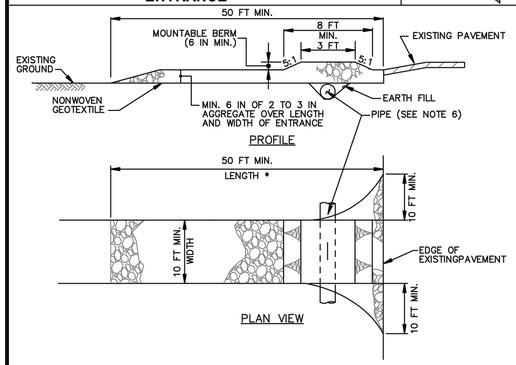

CONSTRUCTION SPECIFICATIONS

1. PLACE STABILIZED CONSTRUCTION ENTRANCE IN ACCORDANCE WITH THE APPROVED PLAN. VEHICLES MUST TRAVEL OVER THE ENTIRE LENGTH OF THE SCE. USE MINIMUM LENGTH OF 50 FEET (*30 FEET FOR SINGLE RESIDENCE LOT). USE MINIMUM WIDTH OF 10 FEET. FLARE SCE 10 FEET MINIMUM AT THE EXISTING ROAD TO PROVIDE A TURNING RADIUS.
2. PIPE ALL SURFACE WATER FLOWING TO OR DIVERTED TOWARD THE SCE UNDER THE ENTRANCE, MAINTAINING POSITIVE DRAINAGE. PROTECT PIPE INSTALLED THROUGH THE SCE WITH A MOUNTABLE BERM WITH 5:1 SLOPES AND A MINIMUM OF 12 INCHES OF STONE OVER THE PIPE. PROVIDE PIPE AS SPECIFIED ON APPROVED PLAN. WHEN THE SCE IS LOCATED AT A HIGH SPOT AND HAS NO DRAINAGE TO CONVEY, A PIPE IS NOT NECESSARY. A MOUNTABLE BERM IS REQUIRED WHEN SCE IS NOT LOCATED AT A HIGH SPOT.
3. PREPARE SUBGRADE AND PLACE NONWOVEN GEOTEXTILE, AS SPECIFIED IN SECTION H-1 MATERIALS.
4. PLACE CRUSHED AGGREGATE (2 TO 3 INCHES IN SIZE) OR EQUIVALENT RECYCLED CONCRETE (WITHOUT REBAR) AT LEAST 6 INCHES DEEP OVER THE LENGTH AND WIDTH OF THE SCE.
5. MAINTAIN ENTRANCE IN A CONDITION THAT MINIMIZES TRACKING OF SEDIMENT. ADD STONE OR MAKE OTHER REPAIRS AS CONDITIONS DEMAND TO MAINTAIN CLEAN SURFACE, MOUNTABLE BERM, AND SPECIFIED DIMENSIONS. IMMEDIATELY REMOVE STONE AND/OR SEDIMENT SPILLED, DROPPED, OR TRACKED ONTO ADJACENT ROADWAY BY VACUUMING, SCRAPING, AND/OR SWEEPING. WASHING ROADWAY TO REMOVE MUD TRACKED ONTO PAVEMENT IS NOT ACCEPTABLE UNLESS WASH WATER IS DIRECTED TO AN APPROVED SEDIMENT CONTROL PRACTICE.

MARYLAND STANDARDS AND SPECIFICATIONS FOR SOIL EROSION AND SEDIMENT CONTROL

U.S. DEPARTMENT OF AGRICULTURE NATURAL RESOURCES CONSERVATION SERVICE	2011	MARYLAND DEPARTMENT OF ENVIRONMENT WATER MANAGEMENT ADMINISTRATION

DETAIL B-4-6-B TEMPORARY SOIL STABILIZATION MATTING SLOPE APPLICATION

STANDARD SYMBOL
TSSMS – * lb/ft²
(* INCLUDE SHEAR STRESS)

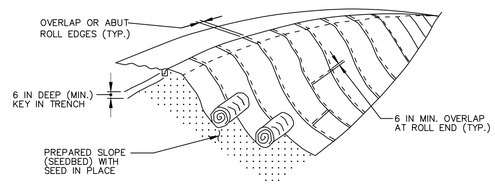

ISOMETRIC VIEW

CONSTRUCTION SPECIFICATIONS

1. USE MATTING THAT HAS A DESIGN VALUE FOR SHEAR STRESS EQUAL TO OR HIGHER THAN THE SHEAR STRESS DESIGNATED ON APPROVED PLANS.
2. USE TEMPORARY SOIL STABILIZATION MATTING MADE OF DEGRADABLE (LASTS 6 MONTHS MINIMUM) NATURAL OR MAN-MADE FIBERS (MOSTLY ORGANIC). MAT MUST HAVE UNIFORM THICKNESS AND DISTRIBUTION OF FIBERS THROUGHOUT AND BE SMOLDER RESISTANT. CHEMICALS USED IN THE MAT MUST BE NON-LEACHING AND NON-TOXIC TO VEGETATION AND SEED GERMINATION AND NON-INJURIOUS TO THE SKIN. IF PRESENT, NETTING MUST BE EXTRUDED PLASTIC WITH A MAXIMUM MESH OPENING OF 2x2 INCHES AND SUFFICIENTLY BONDED OR SEWN ON 2 INCH CENTERS ALONG LONGITUDINAL AXIS OF THE MATERIAL TO PREVENT SEPARATION OF THE NET FROM THE PARENT MATERIAL.
3. SECURE MATTING USING STEEL STAPLES, WOOD STAKES, OR BIODEGRADABLE EQUIVALENT. STAPLES MUST BE "U" OR "T" SHAPED STEEL WIRE HAVING A MINIMUM GAUGE OF NO. 11 AND NO. 8 RESPECTIVELY. "U" SHAPED STAPLES MUST AVERAGE 1 TO 1½ INCHES WIDE AND BE A MINIMUM OF 6 INCHES LONG. "T" SHAPED STAPLES MUST HAVE A MINIMUM 8 INCH MAIN LEG, A MINIMUM 1 INCH SECONDARY LEG, AND A MINIMUM 4 INCH HEAD. WOOD STAKES MUST BE ROUGH-SAWN HARDWOOD, 12 TO 24 INCHES IN LENGTH, 1x3 INCH IN CROSS SECTION, AND WEDGE SHAPED AT THE BOTTOM.
4. PERFORM FINAL GRADING, TOPSOIL APPLICATION, SEEDBED PREPARATION, AND PERMANENT SEEDING IN ACCORDANCE WITH SPECIFICATIONS. PLACE MATTING WITHIN 48 HOURS OF COMPLETING SEEDING OPERATIONS UNLESS END OF WORKDAY STABILIZATION IS SPECIFIED ON THE APPROVED EROSION & SEDIMENT CONTROL PLAN.
5. UNROLL MATTING DOWNSLOPE. LAY MAT SMOOTHLY AND FIRMLY UPON THE SEEDED SURFACE. AVOID STRETCHING THE MATTING.
6. OVERLAP OR ABUT ROLL EDGES PER MANUFACTURER RECOMMENDATIONS. OVERLAP ROLL ENDS BY 6 INCHES (MINIMUM), WITH THE UPSLOPE MAT OVERLAPPING ON TOP OF THE DOWNSLOPE MAT.
7. KEY IN THE UPSLOPE END OF MAT 6 INCHES (MINIMUM) BY DIGGING A TRENCH, PLACING THE MATTING ROLL END IN THE TRENCH, STAPLING THE MAT IN PLACE, REPLACING THE EXCAVATED MATERIAL, AND TAMPING TO SECURE THE MAT END IN THE KEY.
8. STAPLE/STAKE MAT IN A STAGGERED PATTERN ON 4 FOOT (MAXIMUM) CENTERS THROUGHOUT AND 2 FOOT (MAXIMUM) CENTERS ALONG SEAMS, JOINTS, AND ROLL ENDS.
9. ESTABLISH AND MAINTAIN VEGETATION SO THAT REQUIREMENTS FOR ADEQUATE VEGETATIVE ESTABLISHMENT ARE CONTINUOUSLY MET IN ACCORDANCE WITH SECTION B-4 VEGETATIVE STABILIZATION.

MARYLAND STANDARDS AND SPECIFICATIONS FOR SOIL EROSION AND SEDIMENT CONTROL

U.S. DEPARTMENT OF AGRICULTURE NATURAL RESOURCES CONSERVATION SERVICE	2011	MARYLAND DEPARTMENT OF ENVIRONMENT WATER MANAGEMENT ADMINISTRATION

SEE SHEET DE-08 FOR MECHANICALLY STABILIZED EARTH SLOPE DETAILS

DETAIL E-6 FILTER LOG

STANDARD SYMBOL
FL-18
DESIGNATION FL-18 REFERS TO 18 INCH DIAMETER FILTER LOG.

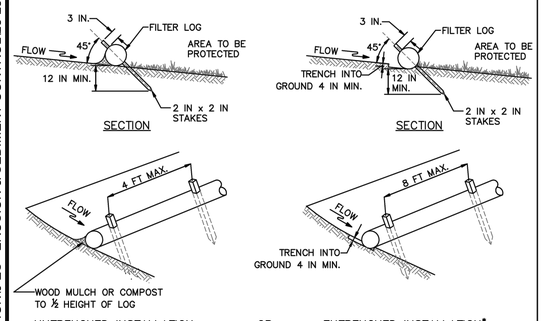

UNTRENCHED INSTALLATION OR ENTRENCHED INSTALLATION*

*THIS APPLICATION MAY NOT BE USED WITH LOGS SMALLER THAN 12 IN.

ISOMETRIC VIEW

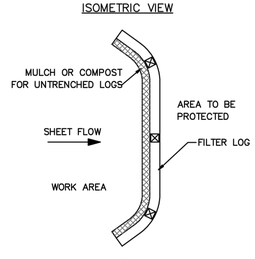

PLAN

1 OF 2

MARYLAND STANDARDS AND SPECIFICATIONS FOR SOIL EROSION AND SEDIMENT CONTROL

U.S. DEPARTMENT OF AGRICULTURE NATURAL RESOURCES CONSERVATION SERVICE	2011	MARYLAND DEPARTMENT OF ENVIRONMENT WATER MANAGEMENT ADMINISTRATION

DETAIL E-6 FILTER LOG

STANDARD SYMBOL
FL-18
DESIGNATION FL-18 REFERS TO 18 INCH DIAMETER FILTER LOG.

CONSTRUCTION SPECIFICATIONS

1. PRIOR TO INSTALLATION, CLEAR ALL OBSTRUCTIONS INCLUDING ROCKS, CLODS, AND DEBRIS GREATER THAN ONE INCH THAT MAY INTERFERE WITH PROPER FUNCTION OF FILTER LOG.
2. FILL LOG NETTING UNIFORMLY WITH COMPOST (IN ACCORDANCE WITH SECTION H-1 MATERIALS), OR OTHER APPROVED BIODEGRADABLE MATERIAL TO DESIRED LENGTH SUCH THAT LOGS DO NOT DEFORM.
3. INSTALL FILTER LOGS PERPENDICULAR TO THE FLOW DIRECTION AND PARALLEL TO THE SLOPE WITH THE BEGINNING AND END OF THE INSTALLATION POINTING SLIGHTLY UP THE SLOPE CREATING A "J" SHAPE AT EACH END TO PREVENT BYPASS.
4. FOR UNTRENCHED INSTALLATION BLOW OR HAND PLACE MULCH OR COMPOST ON UPHILL SIDE OF THE SLOPE ALONG LOG.
5. STAKE FILTER LOG EVERY 4 FEET OR CLOSER ALONG ENTIRE LENGTH OF LOG OR TRENCH LOG INTO GROUND A MINIMUM OF 4 INCHES AND STAKE LOG EVERY 8 FEET OR CLOSER.
6. USE STAKES WITH A MINIMUM NOMINAL CROSS SECTION OF 2X2 INCH AND OF SUFFICIENT LENGTH TO ATTAIN A MINIMUM OF 12 INCHES INTO THE GROUND AND 3 INCHES PROTRUDING ABOVE LOG.
7. WHEN MORE THAN ONE LOG IS NEEDED, OVERLAP ENDS 12 INCHES MINIMUM AND STAKE.
8. REMOVE SEDIMENT WHEN IT HAS ACCUMULATED TO A DEPTH OF ½ THE EXPOSED HEIGHT OF LOG AND REPLACE MULCH. REPLACE FILTER LOG IF TORN. REINSTALL FILTER LOG IF UNDERMINING OR DISLODGING OCCURS. REPLACE CLOGGED FILTER LOGS. FOR PERMANENT APPLICATIONS, ESTABLISH AND CONTINUOUSLY MEET REQUIREMENTS FOR ADEQUATE VEGETATIVE ESTABLISHMENT IN ACCORDANCE WITH SECTION B-4 VEGETATIVE STABILIZATION.

2 OF 2

MARYLAND STANDARDS AND SPECIFICATIONS FOR SOIL EROSION AND SEDIMENT CONTROL

U.S. DEPARTMENT OF AGRICULTURE NATURAL RESOURCES CONSERVATION SERVICE	2011	MARYLAND DEPARTMENT OF ENVIRONMENT WATER MANAGEMENT ADMINISTRATION

DETAIL E-9-3 CURB INLET PROTECTION

STANDARD SYMBOL
CIP

MAXIMUM DRAINAGE AREA = ¼ ACRE

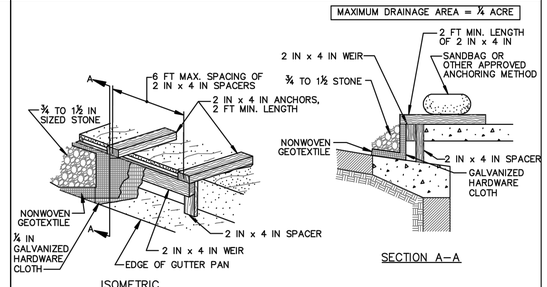

CONSTRUCTION SPECIFICATIONS

1. USE NOMINAL 2 INCH x 4 INCH LUMBER
2. USE NONWOVEN GEOTEXTILE AS SPECIFIED IN SECTION H-1 MATERIALS.
3. NAIL THE 2x4 WEIR TO 9 INCH LONG VERTICAL SPACERS (MAXIMUM 6 FEET APART).
4. ATTACH A CONTINUOUS PIECE OF ¼ INCH GALVANIZED HARDWARE CLOTH, WITH A MINIMUM WIDTH OF 30 INCHES AND A MINIMUM LENGTH OF 4 FEET LONGER THAN THE THROAT OPENING, TO THE 2x4 WEIR, EXTENDING IT 2 FEET BEYOND THROAT ON EACH SIDE.
5. PLACE A CONTINUOUS PIECE OF NONWOVEN GEOTEXTILE OF THE SAME DIMENSIONS AS THE HARDWARE CLOTH OVER THE HARDWARE CLOTH AND SECURELY ATTACH TO THE 2x4 WEIR.
6. PLACE THE ASSEMBLY AGAINST THE INLET THROAT AND NAIL TO 2x4 ANCHORS (MINIMUM 2 FEET LENGTH). EXTEND THE ANCHORS ACROSS THE INLET TOP AND HOLD IN PLACE BY SANDBAGS OR OTHER APPROVED ANCHORING METHOD.
7. INSTALL END SPACERS A MINIMUM OF 1 FOOT BEYOND THE ENDS OF THE THROAT OPENING.
8. FORM THE HARDWARE CLOTH AND THE GEOTEXTILE TO THE CONCRETE GUTTER AND FACE OF CURB TO SPAN THE INLET OPENING. COVER THE HARDWARE CLOTH AND GEOTEXTILE WITH CLEAN ¾ TO 1½ INCH STONE OR EQUIVALENT RECYCLED CONCRETE.
9. AT NON-SUMP LOCATIONS, INSTALL A TEMPORARY SANDBAG OR ASPHALT BERM TO PREVENT INLET BYPASS.
10. STORM DRAIN INLET PROTECTION REQUIRES FREQUENT MAINTENANCE. REMOVE ACCUMULATED SEDIMENT AFTER EACH RAIN EVENT TO MAINTAIN FUNCTION AND AVOID PREMATURE CLOGGING. IF INLET PROTECTION DOES NOT COMPLETELY DRAIN WITHIN 24 HOURS AFTER A STORM EVENT, IT IS CLOGGED. WHEN THIS OCCURS, REMOVE ACCUMULATED SEDIMENT AND CLEAN, OR REPLACE GEOTEXTILE AND STONE.

MARYLAND STANDARDS AND SPECIFICATIONS FOR SOIL EROSION AND SEDIMENT CONTROL

U.S. DEPARTMENT OF AGRICULTURE NATURAL RESOURCES CONSERVATION SERVICE	2011	MARYLAND DEPARTMENT OF ENVIRONMENT WATER MANAGEMENT ADMINISTRATION

NO.	REVISION DESCRIPTION	BY	DATE

DESIGNED BY: PJM
DRAWN BY: GLJ
CHECKED BY: PJM
DATE: 09-15-22

WASHINGTON COUNTY, MARYLAND
DIVISION OF ENGINEERING

Washington County Administrative Annex, Building
80 W. Baltimore St., Hagerstown, MD 21742
Phone: 240-313-2460 Fax: 240-313-2401

INTERSECTION SIGNAL & SIDEWALK IMPROVEMENTS
STOTLER RD. & HALFWAY BLVD.
EROSION & SEDIMENT CONTROL DETAILS

STATE OF MARYLAND
PAMELA JEAN HORN
No. 39957
PROFESSIONAL ENGINEER
10.7.22

SCALE
NONE

SECTION NO.
ES - 04

SHEET NO.
39 OF 48

PROJECT NO.
16-045

K:\CADD\28-281 STOTLER ROAD ADA SIDEWALK\CONSTRUCTION\9 ES - EROSION & SEDIMENT CONTROL\28-281 ES.DWG Last Saved: 10/5/2022 2:02 PM

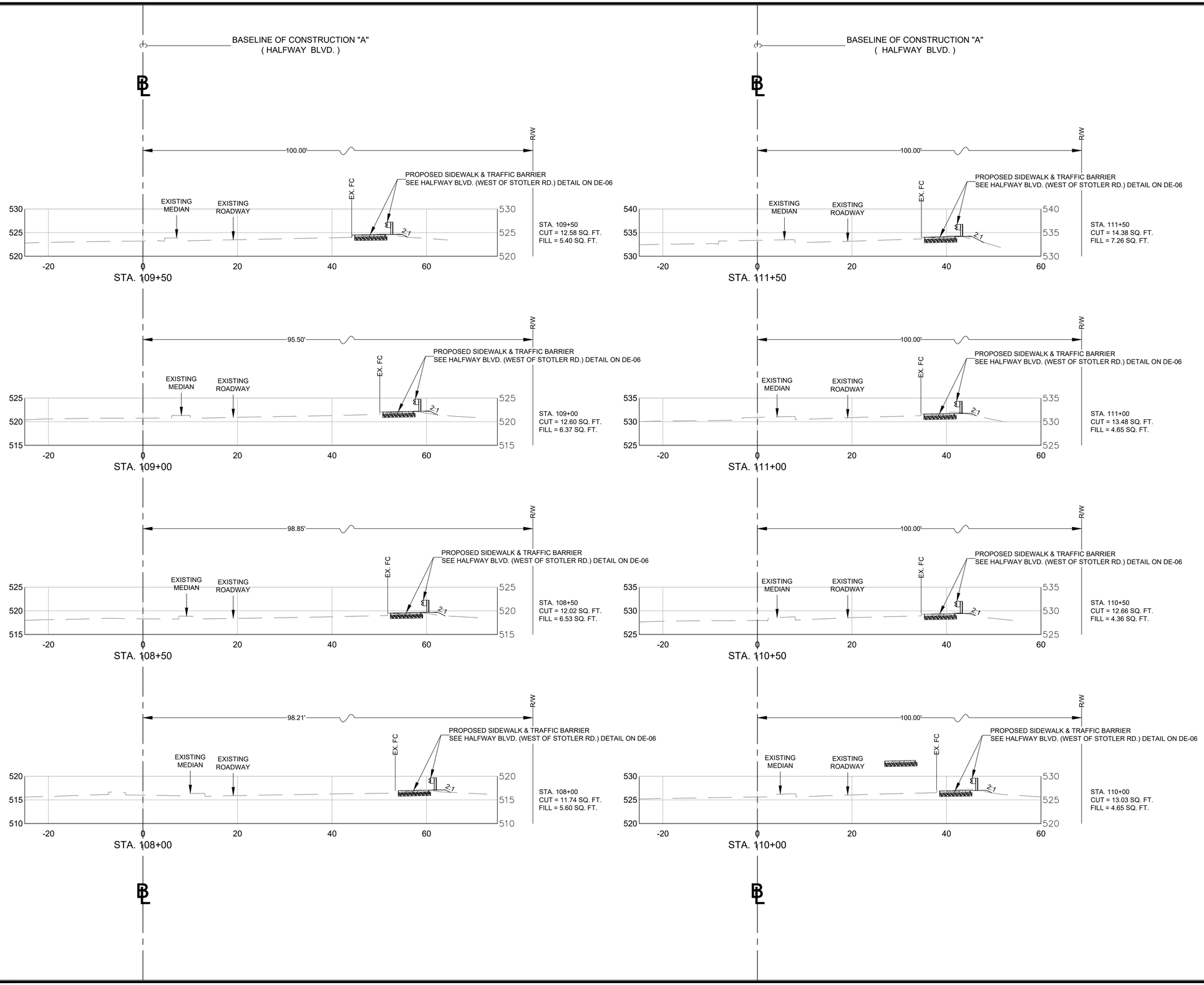

NO.	REVISION DESCRIPTION	BY	DATE

DESIGNED BY: PJM
DRAWN BY: GLJ
CHECKED BY: PJM
DATE: 09-15-22

WASHINGTON COUNTY, MARYLAND
DIVISION OF ENGINEERING

Washington County Administrative Annex, Building
747 Northern Avenue, Hagerstown, Maryland, 21742
Phone: 240-313-2460 Fax: 240-313-2401

INTERSECTION SIGNAL & SIDEWALK IMPROVEMENTS
STOTLER RD. & HALFWAY BLVD.
CROSS SECTIONS StA. 108+00 TO Sta. 111+50

STATE OF MARYLAND
PAMELA JEAN MOHN
No. 39257
PROFESSIONAL ENGINEER
10.7.22

SCALE
1" = 10'

SECTION NO.
CS - 01

SHEET NO.
40 OF 48

PROJECT NO.
16-045

K:\CADD\28-281 STOTLER ROAD ADA SIDEWALK\CONSTRUCTION\15 CS - CROSS SECTIONS\28-281 CS.DWG Last Saved: 10/5/2022 2:06 PM

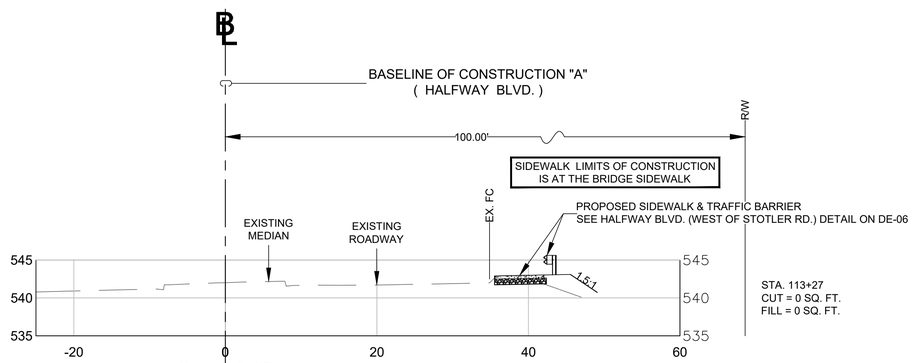

STA. 113+27

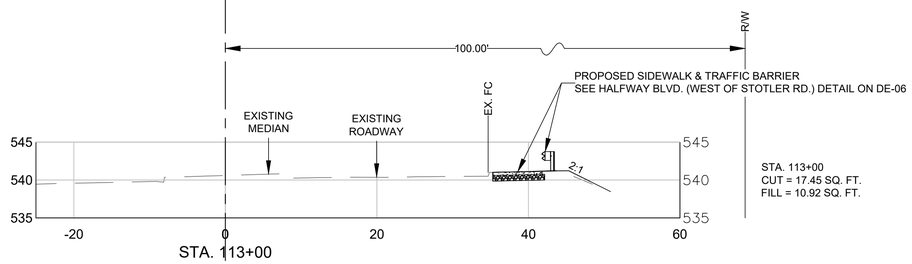

STA. 113+00

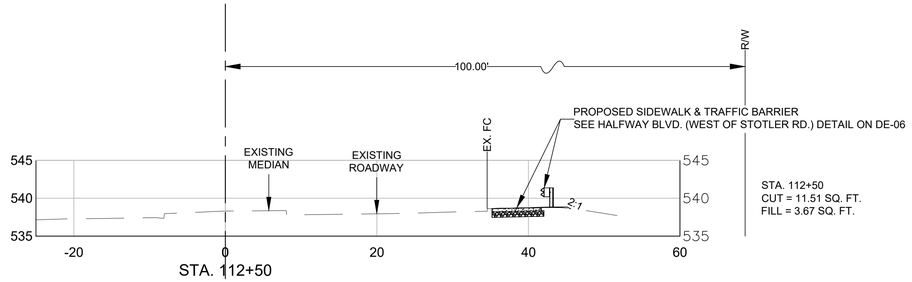

STA. 112+50

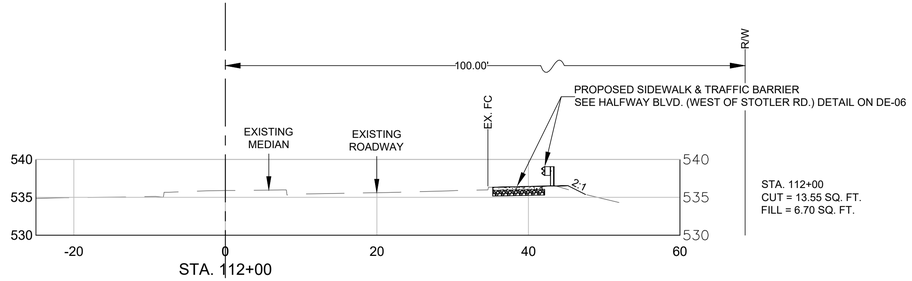

STA. 112+00

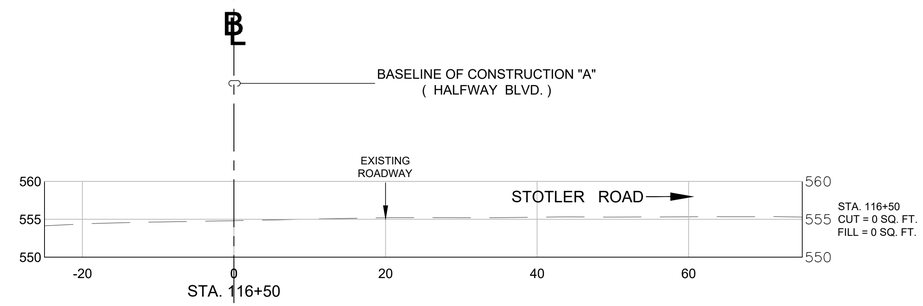

STA. 116+50

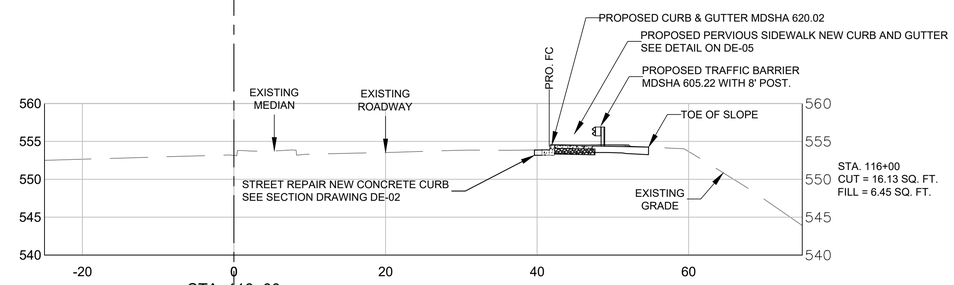

STA. 116+00

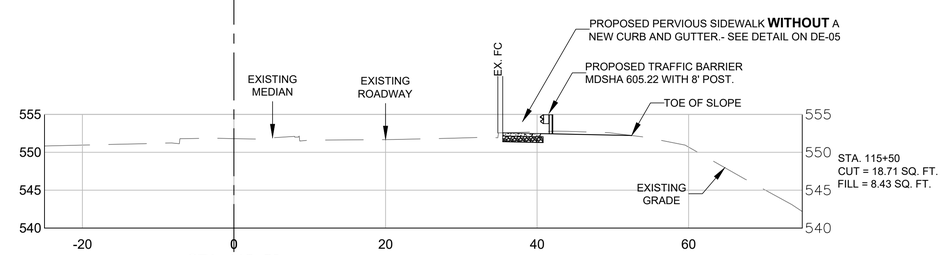

STA. 115+50

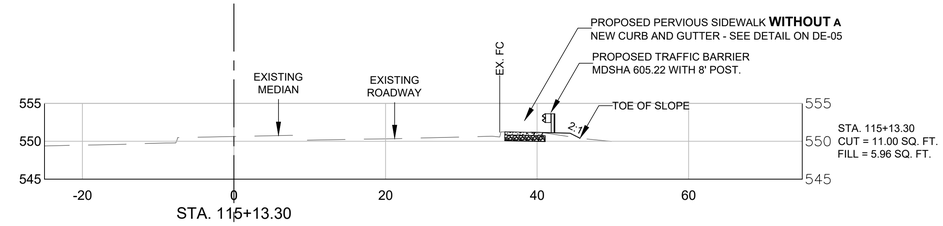

STA. 115+13.30

NO.	REVISION DESCRIPTION	BY	DATE

DESIGNED BY: PJM
DRAWN BY: GLJ
CHECKED BY: PJM
DATE: 09-15-22

WASHINGTON COUNTY, MARYLAND
DIVISION OF ENGINEERING

Washington County Administrative Annex Building
747 Northern Avenue, Hagerstown, Maryland, 21742
Phone: 240-313-2460 Fax: 240-313-2401

INTERSECTION SIGNAL & SIDEWALK IMPROVEMENTS
STOTLER RD. & HALFWAY BLVD.
CROSS SECTIONS StA. 112+00 TO Sta. 116+50

STATE OF MARYLAND
PAMELA JEAN NOTH
No. 39251
PROFESSIONAL ENGINEER
10.7.22

SCALE
1" = 10'

SECTION NO.
CS - 02

SHEET NO.
41 OF 48

PROJECT NO.
16-045

K:\CADD\28-281 STOTLER ROAD ADA SIDEWALK\CONSTRUCTION\15 CS - CROSS SECTIONS\28-281 CS.DWG Last Saved: 10/5/2022 2:06 PM

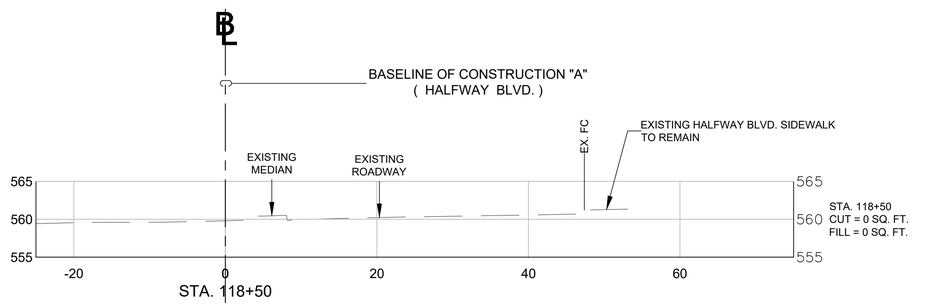

STA. 118+50

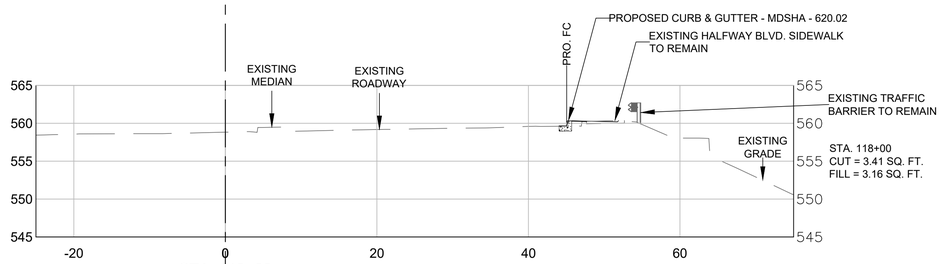

STA. 118+00

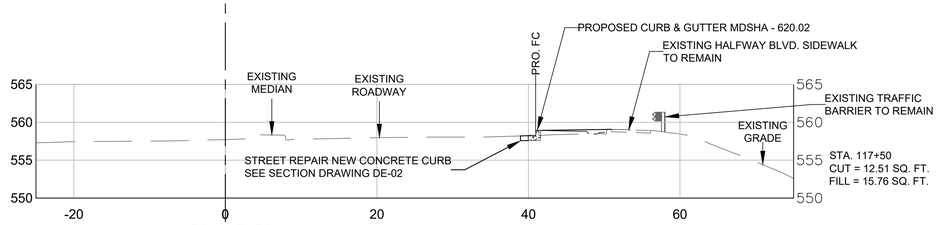

STA. 117+50

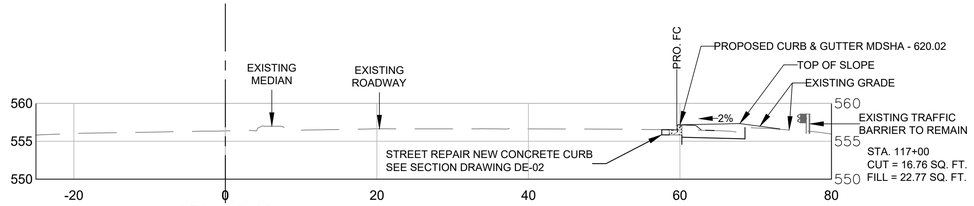

STA. 117+00

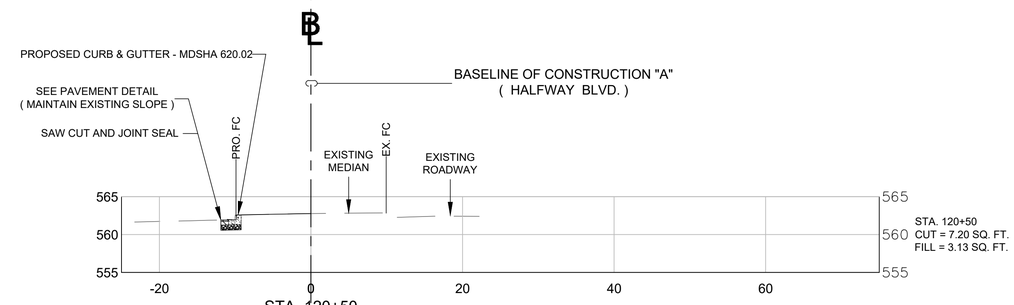

STA. 120+50

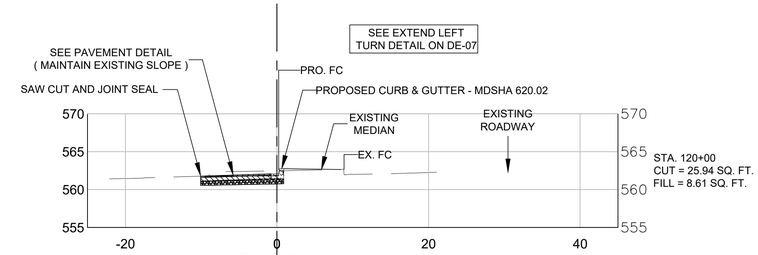

STA. 120+00

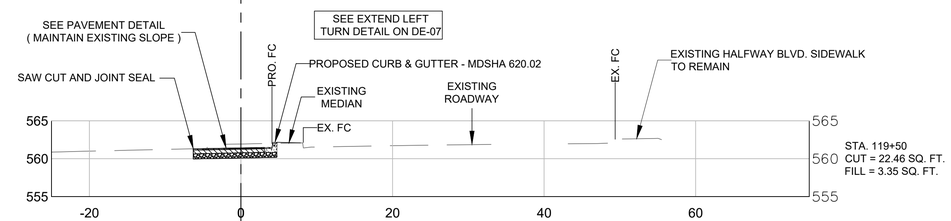

STA. 119+50

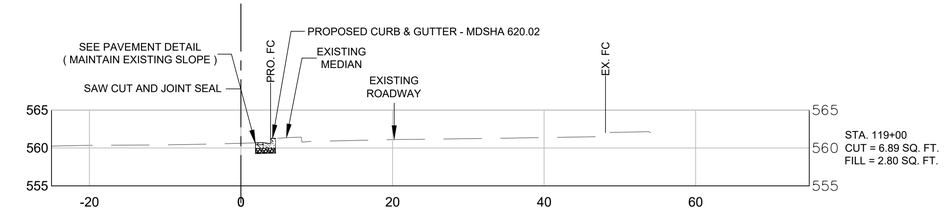

STA. 119+00

K:\CADD\28-281 STOTLER ROAD ADA SIDEWALK\CONSTRUCTION\15 CS - CROSS SECTIONS\28-281 CS.DWG Last Saved: 10/5/2022 2:08 PM

NO.	REVISION DESCRIPTION	BY	DATE

DESIGNED BY: PJM
DRAWN BY: GLJ
CHECKED BY: PJM
DATE: 09-15-22

WASHINGTON COUNTY, MARYLAND
DIVISION OF ENGINEERING

Washington County Administrative Annex Building
747 Northern Avenue, Hagerstown, Maryland, 21742
Phone: 240-313-2460 Fax: 240-313-2401

INTERSECTION SIGNAL & SIDEWALK IMPROVEMENTS
STOTLER RD. & HALFWAY BLVD.
CROSS SECTIONS StA. 117+00 TO Sta. 120+50

STATE OF MARYLAND
PAMELA JEAN MOHN
No. 39252
PROFESSIONAL ENGINEER
10.7.22

SCALE
1" = 10'

SECTION NO.
CS - 03

SHEET NO.
42 OF 48

PROJECT NO.
16-045

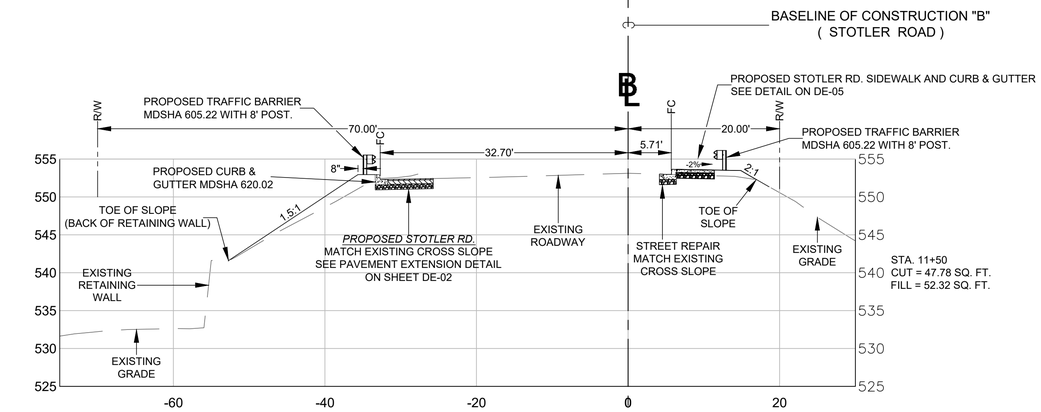

STA. 11+50

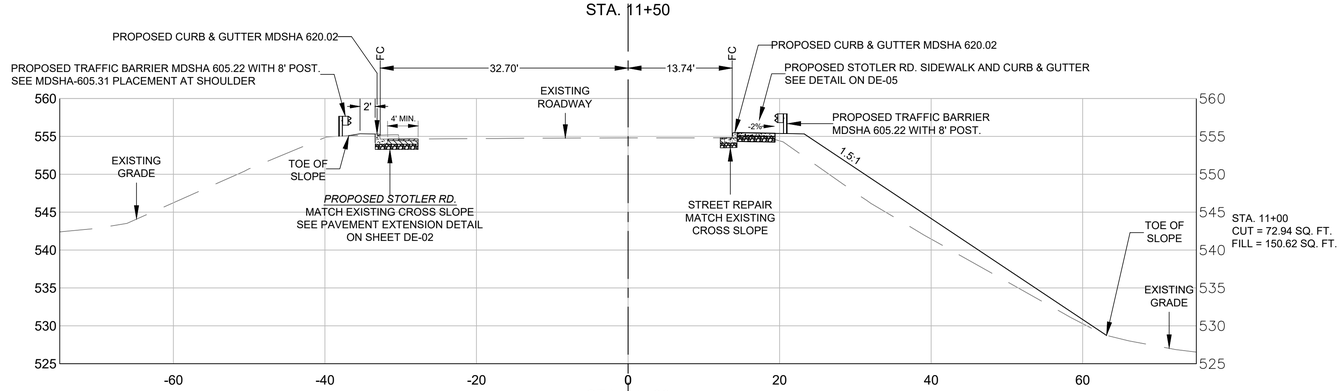

STA. 11+00

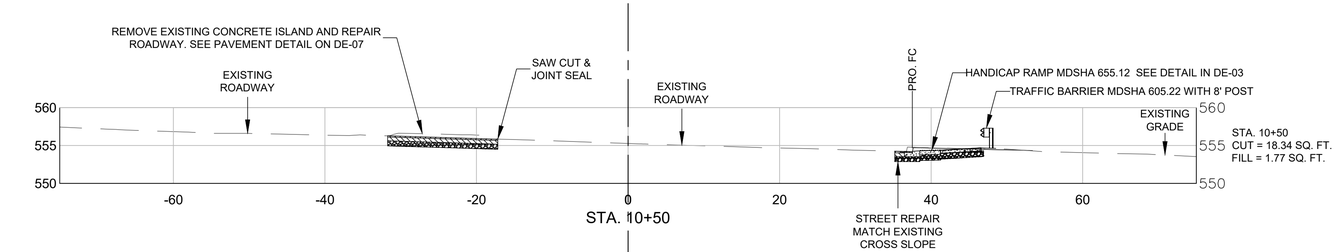

STA. 10+50

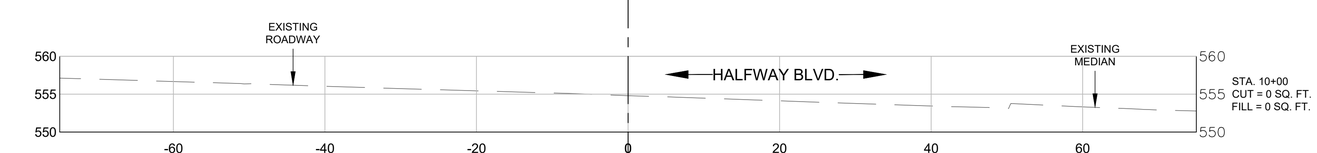

STA. 10+00

℄

K:\CADD\28-281 STOTLER ROAD ADA SIDEWALK\CONSTRUCTION\15 CS - CROSS SECTIONS\28-281 CS.DWG Last Saved: 10/5/2022 2:08 PM

NO.	REVISION DESCRIPTION	BY	DATE

DESIGNED BY: PJM
DRAWN BY: GLJ
CHECKED BY: PJM
DATE: 09-15-22

WASHINGTON COUNTY, MARYLAND
DIVISION OF ENGINEERING

Washington County Administrative Annex, Building
747 Northern Avenue, Hagerstown, Maryland, 21742
Phone: 240-313-2460 Fax: 240-313-2401

INTERSECTION SIGNAL &
SIDEWALK IMPROVEMENTS
STOTLER RD. & HALFWAY BLVD.
CROSS SECTIONS Sta. 10+00 TO Sta. 11+50

STATE OF MARYLAND
PAMELA JEAN WOHN
No. 39957
PROFESSIONAL ENGINEER
10.7.22

SCALE
1" = 10'

SECTION NO.
CS - 04

SHEET NO.
43 OF 48

PROJECT NO.
16-045

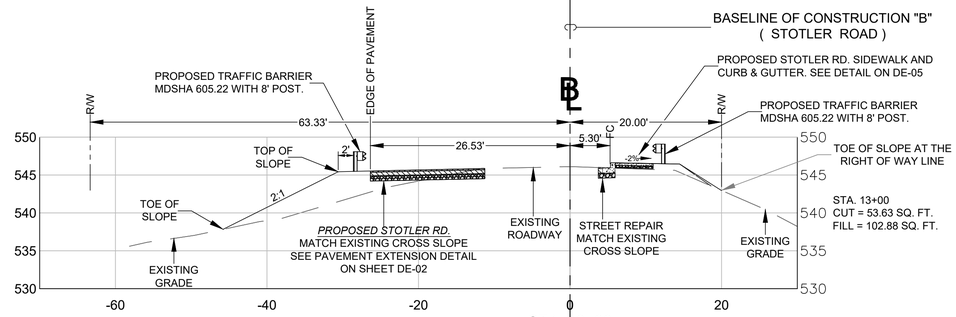

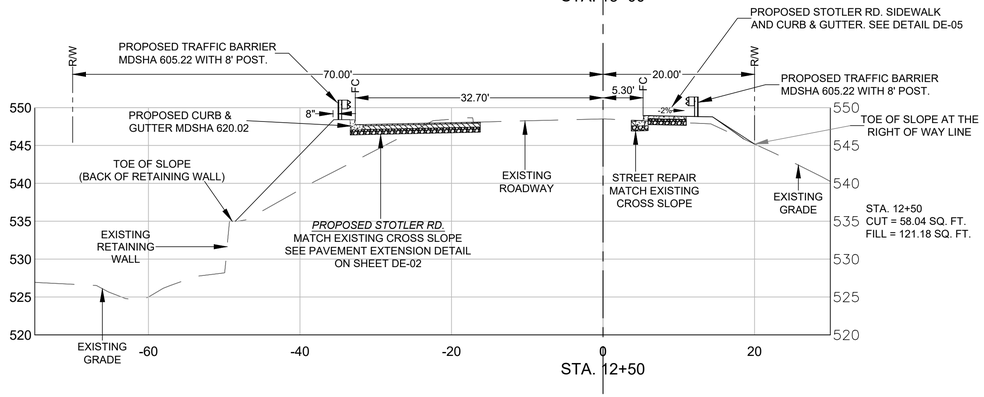

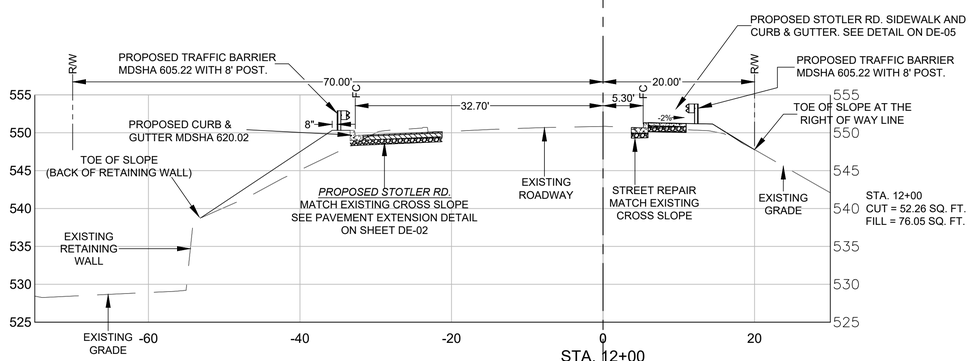

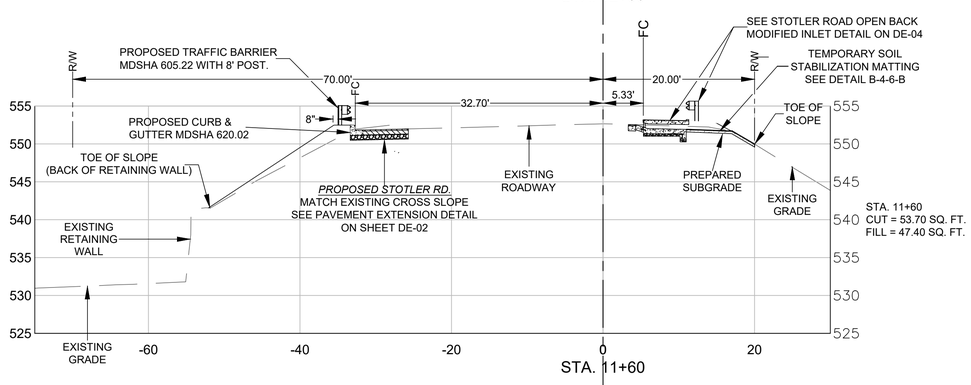

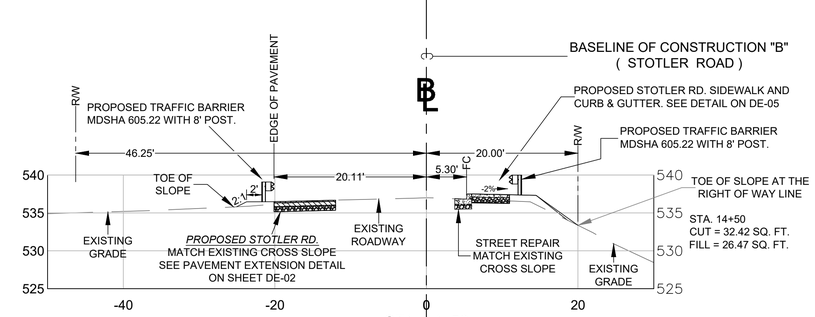

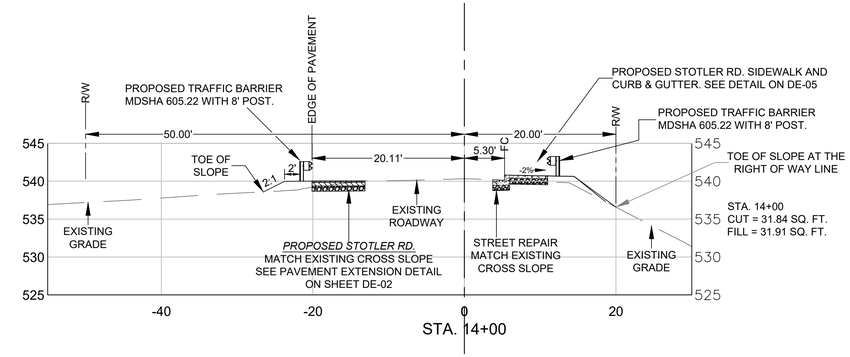

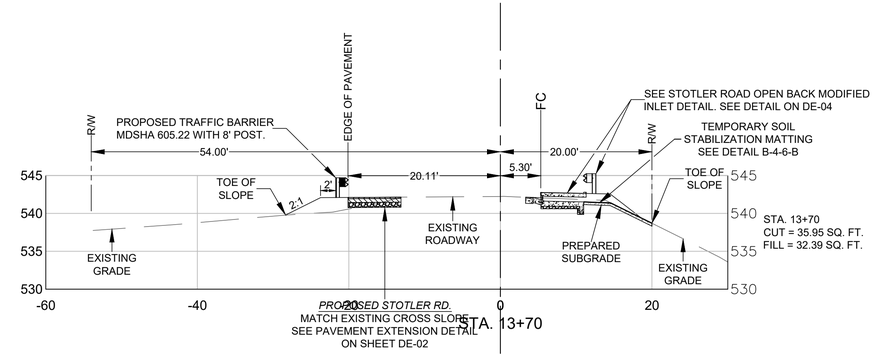

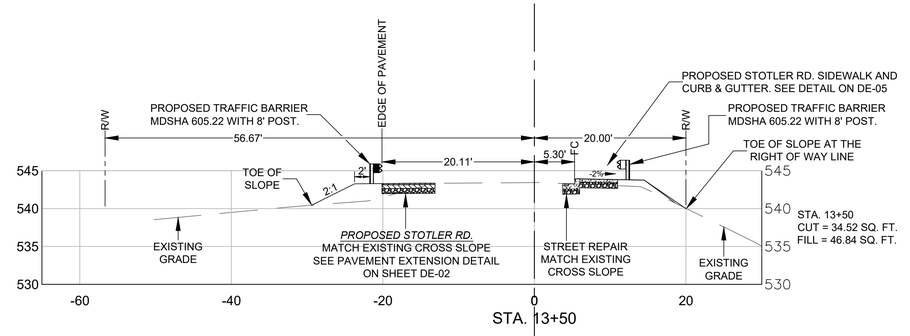

NO.	REVISION DESCRIPTION	BY	DATE

DESIGNED BY: PJM
DRAWN BY: GLJ
CHECKED BY: PJM
DATE: 09-15-22

WASHINGTON COUNTY, MARYLAND
DIVISION OF ENGINEERING

Washington County Administrative Annex Building
747 Northern Avenue, Hagerstown, Maryland, 21742
Phone: 240-313-2460 Fax: 240-313-2401

INTERSECTION SIGNAL & SIDEWALK IMPROVEMENTS
STOTLER RD. & HALFWAY BLVD.
CROSS SECTIONS StA. 11+60 TO Sta. 14+50

STATE OF MARYLAND
PAMELA JEAN WOHN
No. 39951
PROFESSIONAL ENGINEER
10.7.22

SCALE
1" = 10'

SECTION NO.
CS - 05

SHEET NO.
44 OF 48

PROJECT NO.
16-045

K:\CADD\28-281 STOTLER ROAD ADA SIDEWALK\CONSTRUCTION\15 CS - CROSS SECTIONS\28-281 CS.DWG Last Saved: 10/5/2022 2:08 PM

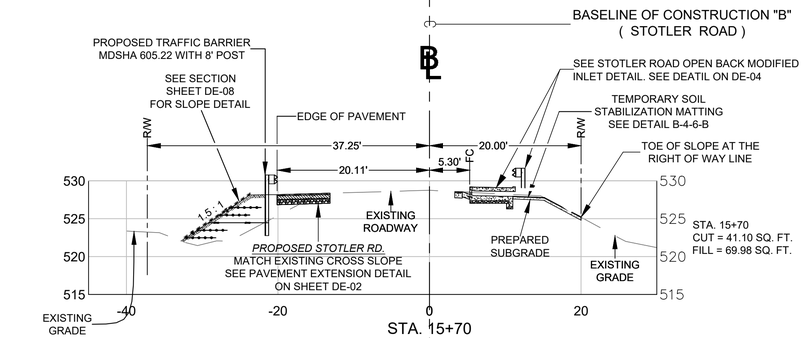

STA. 15+70

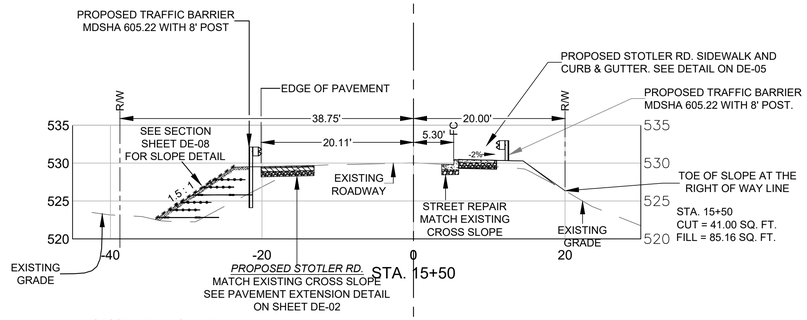

STA. 15+50

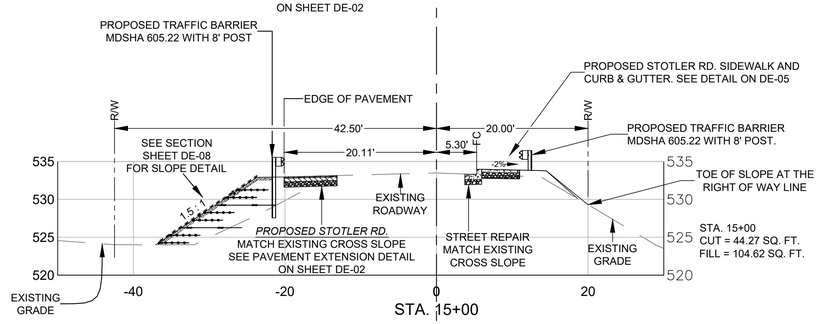

STA. 15+00

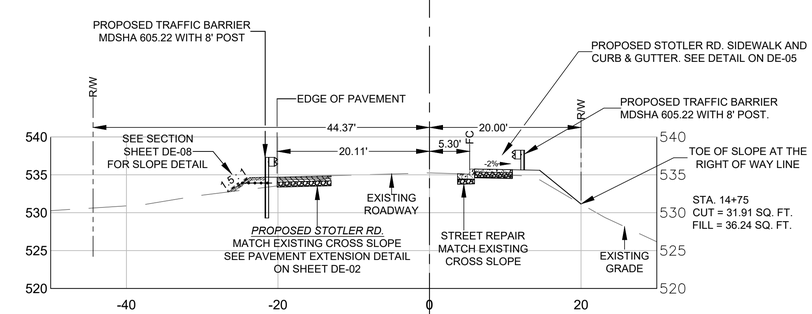

STA. 14+75

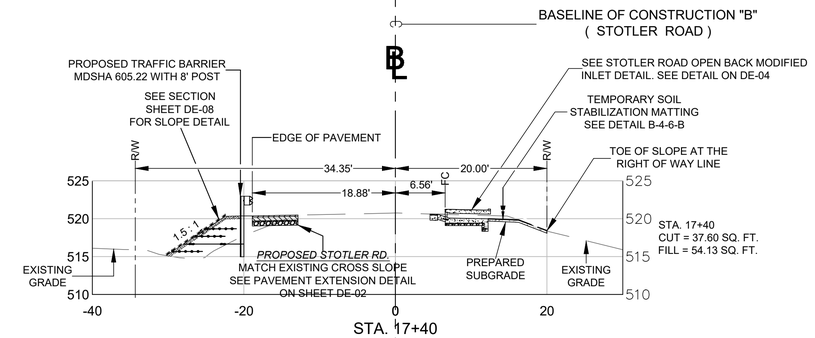

STA. 17+40

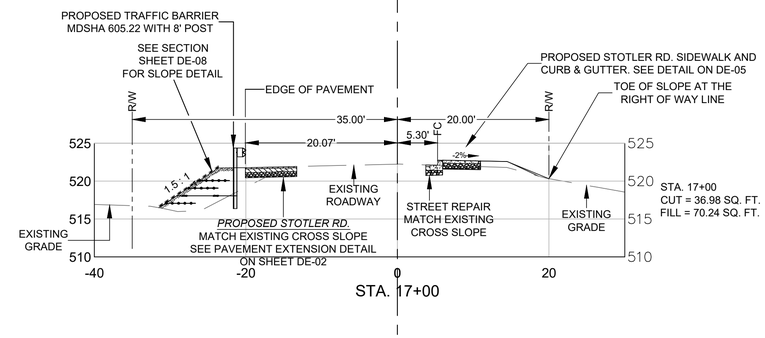

STA. 17+00

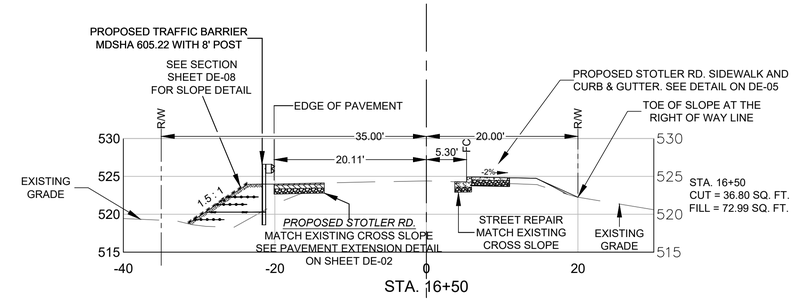

STA. 16+50

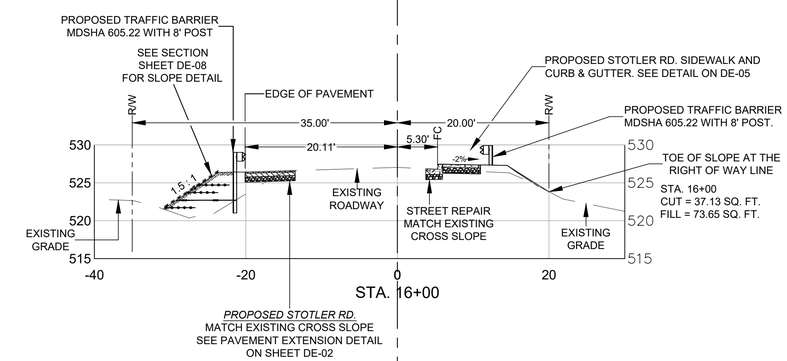

STA. 16+00

NO.	REVISION DESCRIPTION	BY	DATE

DESIGNED BY: PJM
DRAWN BY: GLJ
CHECKED BY: PJM
DATE: 09-15-22

WASHINGTON COUNTY, MARYLAND
DIVISION OF ENGINEERING

Washington County Administrative Annex, Building
747 Northern Avenue, Hagerstown, Maryland, 21742
Phone: 240-313-2460 Fax: 240-313-2401

INTERSECTION SIGNAL & SIDEWALK IMPROVEMENTS
STOTLER RD. & HALFWAY BLVD.
CROSS SECTIONS StA. 15+00 TO Sta. 17+50

STATE OF MARYLAND
PAMELA JEAN MOORE
No. 39257
PROFESSIONAL ENGINEER
10.7.22

SCALE
1" = 10'

SECTION NO.
CS - 06

SHEET NO.
45 OF 48

PROJECT NO.
16-045

K:\CADD\28-281 STOTLER ROAD ADA SIDEWALK\CONSTRUCTION\15 CS - CROSS SECTIONS\28-281 CS.DWG Last Saved: 10/5/2022 2:10 PM

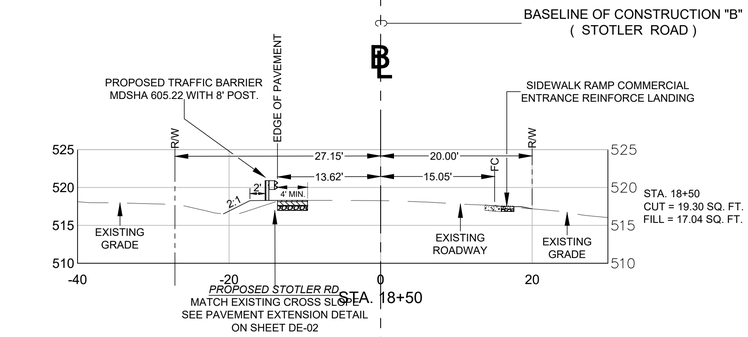

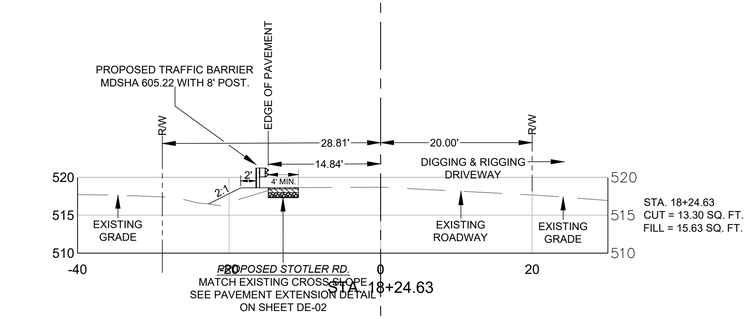

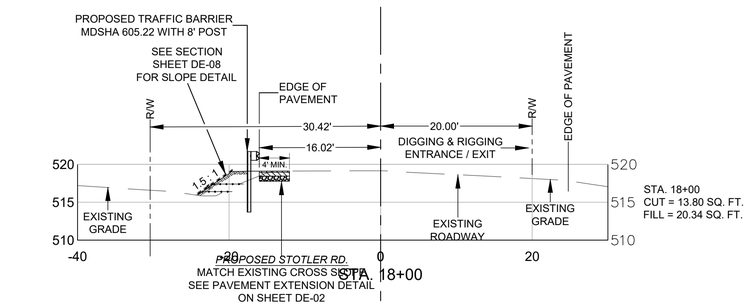

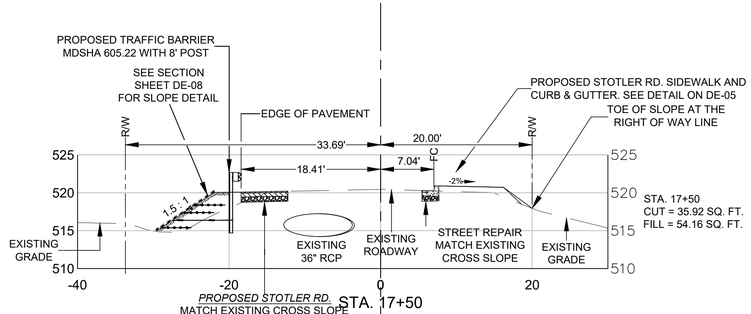

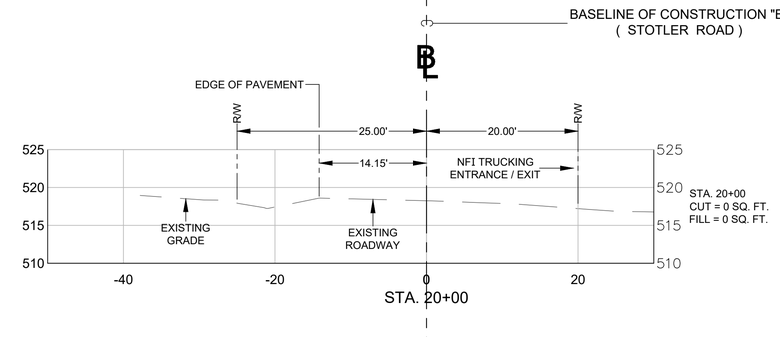

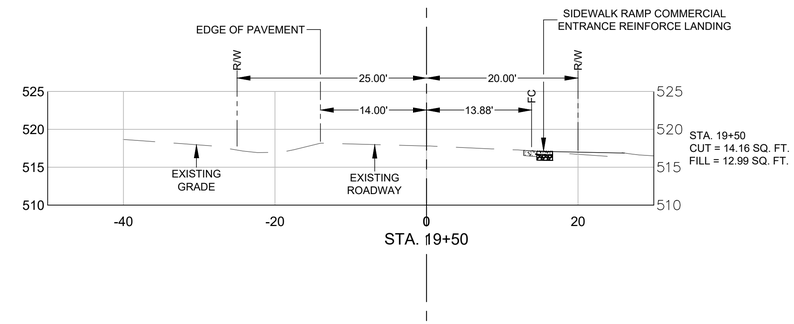

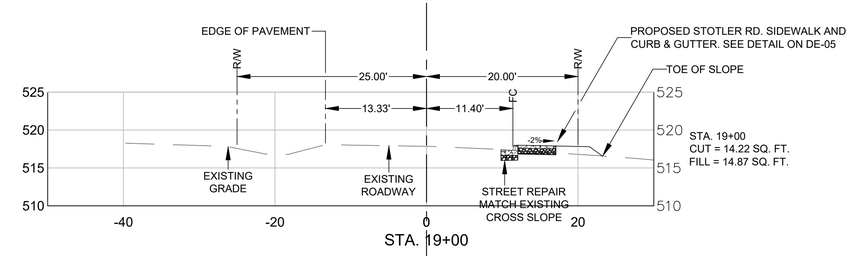

NO.	REVISION DESCRIPTION	BY	DATE

DESIGNED BY: PJM
DRAWN BY: GLJ
CHECKED BY: PJM
DATE: 09-15-22

WASHINGTON COUNTY, MARYLAND
DIVISION OF ENGINEERING

Washington County Administrative Annex Building
747 Northern Avenue, Hagerstown, Maryland, 21742
Phone: 240-313-2460 Fax: 240-313-2401

INTERSECTION SIGNALIZATION &
CURB / SIDEWALK IMPROVEMENTS
STOTLER RD. & HALFWAY BLVD.
CROSS SECTIONS StA. 15+00 TO Sta. 17+50

STATE OF MARYLAND
PAMELA JEAN MOHN
No. 39252
PROFESSIONAL ENGINEER
10.7.22

SCALE
1" = 10'

SECTION NO.
CS - 07

SHEET NO.
46 OF 48

PROJECT NO.
16-045

K:\CADD\28-281 STOTLER ROAD ADA SIDEWALK\CONSTRUCTION\15 CS - CROSS SECTIONS\28-281 CS.DWG Last Saved: 10/5/2022 2:11 PM

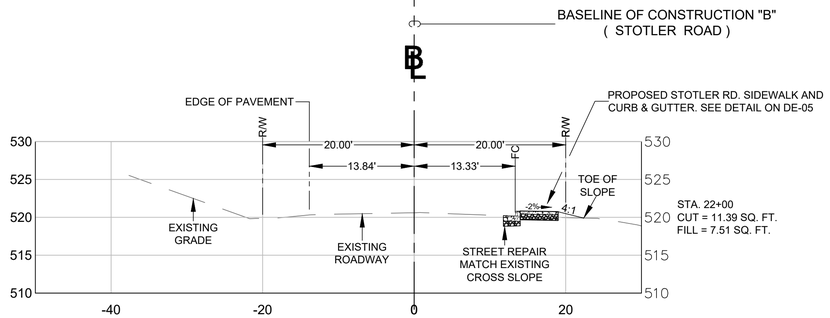

STA. 22+00

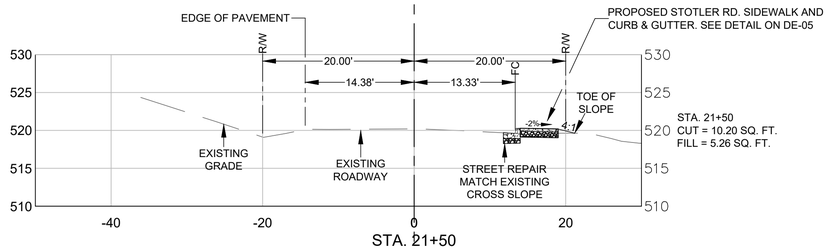

STA. 21+50

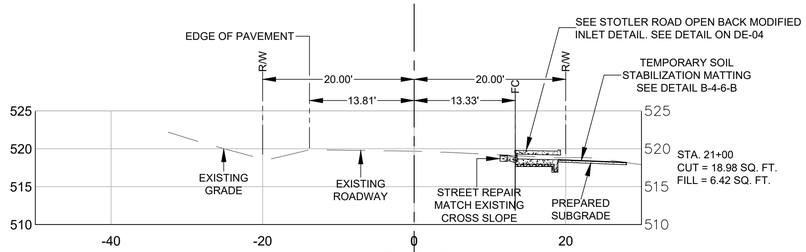

STA. 21+00

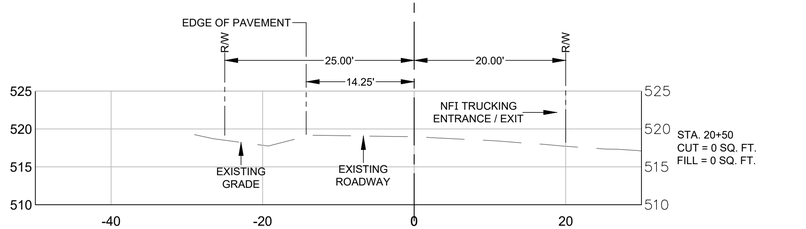

STA. 20+50

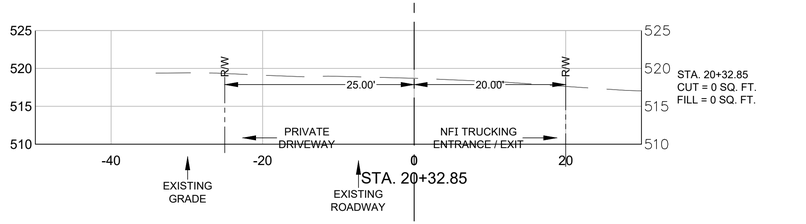

STA. 20+32.85

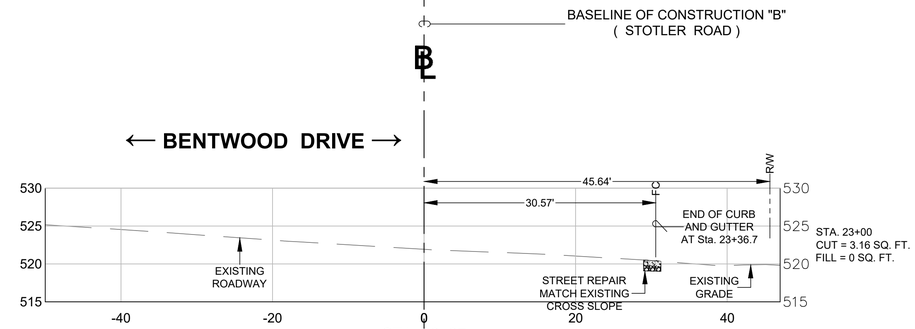

STA. 23+37

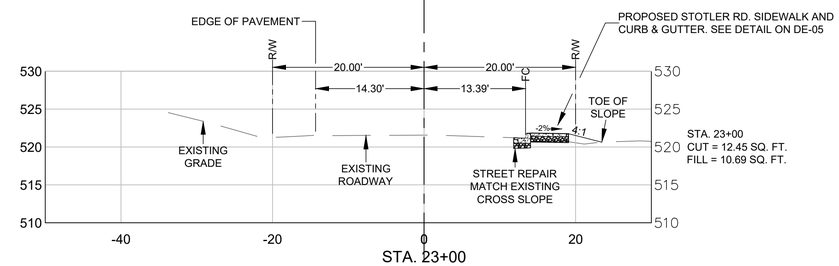

STA. 23+00

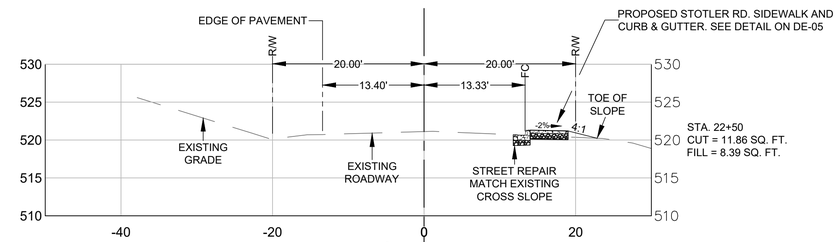

STA. 22+50

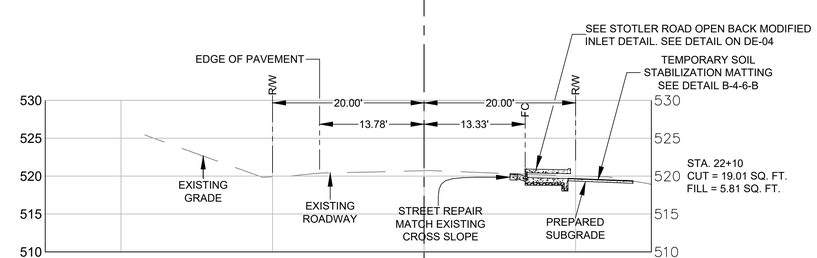

STA. 22+10

NO.	REVISION DESCRIPTION	BY	DATE

DESIGNED BY: PJM
DRAWN BY: GLJ
CHECKED BY: PJM
DATE: 09-15-22

WASHINGTON COUNTY, MARYLAND
DIVISION OF ENGINEERING

Washington County Administrative Annex Building
747 Northern Avenue, Hagerstown, Maryland, 21742
Phone: 240-313-2460 Fax: 240-313-2401

INTERSECTION SIGNAL & SIDEWALK IMPROVEMENTS
STOTLER RD. & HALFWAY BLVD.
CROSS SECTIONS Sta. 15+00 TO Sta. 17+50

STATE OF MARYLAND
PAMELA JEAN MOHN
No. 39252
PROFESSIONAL ENGINEER
10.7.22

SCALE
1" = 10'

SECTION NO.
CS - 08

SHEET NO.
47 OF 48

PROJECT NO.
16-045

K:\CADD\28-281 STOTLER ROAD ADA SIDEWALK\CONSTRUCTION\15 CS - CROSS SECTIONS\28-281 CS.DWG Last Saved: 10/5/2022 2:12 PM

Halfway Blvd - Project No. 16-045

Baseline "A" - Sta.107+50 to Sta. 113+27

Results

Total Cut Volume	=	271.1 cu yd
Total Fill Volume	=	132.7 cu yd
Total Adj Fill Volume	=	132.7 cu yd
Net Balance	=	141.4 cu yd
Adjusted Cut Volume	=	271.1 cu yd

Station (ft)	Cut Area (sq ft)	Fill Area (sq ft)	Cut Volume (cu yd)	Adj. Cut Vol (cu yd)	Fill Vol (cu yd)
107+50.00	0.00	0.00			
108+00.00	11.74	5.60	10.9		5.2
108+50.00	12.02	6.53	22.0		11.2
109+00.00	12.60	6.37	22.8		11.9
109+50.00	12.58	5.40	23.3		10.9
110+00.00	13.03	4.65	23.7		9.3
110+50.00	12.66	4.36	23.8		8.3
111+00.00	13.48	4.65	24.2		8.3
111+50.00	14.38	7.26	25.8		11.0
112+00.00	13.55	6.70	25.9		12.9
112+50.00	11.51	3.67	23.2		9.6
113+00.00	17.45	10.92	26.8		13.5
113+27.00	19.96	30.18	18.7		20.6

Halfway Blvd - Project No. 16-045

Baseline "A" - Sta.115+00 to Sta. 118+50

Results

Total Cut Volume	=	133.3 cu yd
Total Fill Volume	=	109.7 cu yd
Total Adj Fill Volume	=	109.7 cu yd
Net Balance	=	23.6 cu yd
Adjusted Cut Volume	=	133.3 cu yd

Station (ft)	Cut Area (sq ft)	Fill Area (sq ft)	Cut Volume (cu yd)	Adj. Cut Vol (cu yd)	Fill Vol (cu yd)
115+00.00	11.00	5.96			
115+13.30	11.00	5.96	5.4		2.9
115+50.00	18.71	8.43	20.2		9.8
116+00.00	16.13	6.45	32.3		13.8
116+50.00	0.00	0.00	14.9		6.0
117+00.00	16.76	22.77	15.5		21.1
117+50.00	12.51	15.76	27.1		35.7
118+00.00	3.41	3.16	14.7		17.5
118+50.00	0.00	0.00	3.2		2.9

Halfway Blvd - Project No. 16-045

Baseline "A" - Sta.119+00 to Sta. 120+50 - Left Turn Lane Extension

Results

Total Cut Volume	=	102.7 cu yd
Total Fill Volume	=	27.7 cu yd
Total Adj Fill Volume	=	27.7 cu yd
Net Balance	=	75.0 cu yd
Adjusted Cut Volume	=	102.7 cu yd

Station (ft)	Cut Area (sq ft)	Fill Area (sq ft)	Cut Volume (cu yd)	Adj. Cut Vol (cu yd)	Fill Vol (cu yd)
119+00.00	6.89	2.80			
119+50.00	22.46	3.35	27.2		5.7
120+00.00	25.94	8.61	44.8		11.1
120+50.00	7.20	3.13	30.7		10.9

Stotler Rd - Project No. 16-045

Baseline "B" - Sta.10+00 to Sta. 23+37

Results

Total Cut Volume	=	1418.7 cu yd
Total Fill Volume	=	2103.8 cu yd
Total Adj Fill Volume	=	2103.8 cu yd
Net Balance	=	-685.1 cu yd
Adjusted Cut Volume	=	1418.7 cu yd

Station (ft)	Cut Area (sq ft)	Fill Area (sq ft)	Cut Volume (cu yd)	Fill Vol (cu yd)
10+00.00	0.00	0.00		
10+50.00	18.34	1.77	17.0	1.6
11+00.00	72.94	150.62	84.5	141.1
11+50.00	47.78	52.32	111.8	167.9
11+60.00	53.70	47.40	18.8	18.5
12+00.00	52.26	76.05	78.5	91.4
12+50.00	58.04	121.18	102.1	182.6
13+00.00	53.63	102.88	103.4	207.5
13+50.00	34.52	46.84	81.6	138.6
13+70.00	35.95	32.39	28.1	29.3
14+00.00	31.84	31.91	37.7	35.7
14+50.00	32.42	26.47	59.5	54.1
14+75.00	31.91	36.24	29.8	29.0
15+00.00	44.27	104.62	35.3	65.2
15+50.00	41.00	85.16	79.0	175.7
15+70.00	41.10	69.98	30.4	57.5
16+00.00	37.13	73.85	43.5	79.8
16+50.00	36.80	72.99	68.5	135.8
17+00.00	36.98	70.24	68.3	132.6
17+40.00	37.60	54.13	55.2	92.1
17+50.00	35.92	54.16	13.6	20.1
18+00.00	13.80	20.34	46.0	69.0
18+24.63	13.30	15.63	12.4	16.4
18+50.00	19.30	17.04	15.3	15.3
18+85.00	19.78	8.06	25.3	16.3
19+00.00	14.22	14.87	9.4	6.4
19+50.00	14.16	12.99	26.3	25.8
20+00.00	0.00	0.00	13.1	12.0
20+32.85	0.00	0.00	.0	.0
20+50.00	0.00	0.00	.0	.0
21+00.00	18.98	6.42	17.6	5.9
21+50.00	10.20	5.26	27.0	10.8
22+00.00	11.39	7.51	20.0	11.8
22+10.00	19.01	5.81	5.6	2.5
22+50.00	11.86	8.39	22.9	10.5
23+00.00	12.45	10.69	22.5	17.7
23+37.00	3.16	0.00	10.7	7.3

NOTES:

1. ENGINEERED/CONTROLLED FILL SHALL HAVE A MAXIMUM DRY DENSITY OF NOT LESS THAN 100 LBS/CF. SATISFACTORY SOILS FOR FILL INCLUDE GW, GP, GM, SW, SM, SC, ML, CL OR A COMBINATION OF THESE GROUP SYMBOLS FROM EXCAVATION OR BORROW WHICH CAN BE COMPACTED TO FORM STABLE EMBANKMENTS AND FILLS (BEING FREE OF ROCK OR GRAVEL LARGER THAN 6 INCHES IN ANY DIMENSION) AS ACCEPTED BY THE ENGINEER. FILL FOR PLACEMENT IN ALL AREAS SHALL CONFORM TO A LIQUID LIMIT OF 45 MAXIMUM AND A PLASTICITY INDEX OF 30 MAXIMUM OR TO THE LIMITS AS CERTIFIED BY THE GEOTECHNICAL ENGINEER. UNSATISFACTORY SOILS/MATERIALS THAT ARE NOT ACCEPTABLE FOR USE INCLUDE CH, MH, OH, OL, PT, DEBRIS, WASTE, FROZEN MATERIALS, VEGETATION, AND OTHER ORGANIC/DELETERIOUS MATTER. SOILS TREATED WITH LIME AND PLACEMENT OF GEOGRIDS/GEOTEXTILE FABRICS MAY BE USED FOR SUBGRADE REMEDIATION AS CERTIFIED BY THE GEOTECHNICAL ENGINEER AND APPROVED BY THE ENGINEER.

2. ALL PROPOSED FILL AND SUITABLE SUBGRADE MATERIALS SHALL BE REVIEWED AND APPROVED BY A GEOTECHNICAL ENGINEER PRIOR TO PLACEMENT. THE CONTRACTOR SHALL RETAIN THE SERVICES OF A GEOTECHNICAL ENGINEERING FIRM TO MONITOR CONSTRUCTION ACTIVITIES AND PERFORM TESTING. THE COST OF GEOTECHNICAL AND TESTING SERVICES ARE INCIDENTAL TO THE PERTINENT EXCAVATION, BORROW, AND SUBGRADE ITEMS IN THE CONTRACT.

3. THE EXCAVATION AND RE-USE OF EXCAVATED MATERIAL WILL BE MEASURED AND PAID FOR UNDER THE UNCLASSIFIED EXCAVATION ITEM IN THE CONTRACT. AS PART OF THE WORK, THE CONTRACTOR SHALL EXCAVATE AND SEPARATELY STOCKPILE SUITABLE FILL DURING THE PROGRESS OF THE EXCAVATION. CONTRACT QUANTITIES FOR FILL ARE BASED ON RE-USE OF ON SITE SUITABLE EXCAVATED MATERIALS AS WELL AS USE OF IMPORTED COMMON BORROW. THE CONTRACTOR SHALL UTILIZE ALL ON SITE MATERIALS PRIOR TO IMPORTING FILL ON THE PROJECT. THE CONTRACTOR SHALL ADEQUATELY PROTECT THE STOCKPILED MATERIAL THAT IS ACCEPTABLE FOR RE-USE AS FILL. STOCKPILED MATERIAL THAT IS TOO WET TO ACHIEVE PROPER COMPACTION SHALL BE LEFT TO DRAIN, DRY, AND BE AERATED BY HARROWING OR OTHER APPROVED METHODS UNTIL THE MOISTURE CONTENT IS UNIFORM AND WITHIN THE SPECIFIED LIMITS. WHERE CONDITIONS REQUIRE THE IMPORTING OF FILL, THE MATERIAL SHALL BE A SOIL-ROCK MATERIAL (DIRTY CRUSHER RUN, ETC.) FREE OF ORGANIC MATTER THAT MEETS THE REQUIREMENTS FOR SUITABLE BACKFILL AS ACCEPTED BY THE ENGINEER. IMPORTING OF FILL WILL BE MEASURED AND PAID FOR UNDER THE COMMON BORROW ITEM IN THE CONTRACT.

4. BEFORE COMPACTION, EACH LAYER SHALL BE MOISTENED OR AERATED BY THE CONTRACTOR AS NECESSARY TO ACHIEVE THE REQUIRED COMPACTION. EACH LAYER SHALL BE COMPACTED TO THE REQUIRED PERCENTAGE OF MAXIMUM DRY DENSITY. FILL SHALL NOT BE PLACED ON SURFACES THAT ARE MUDDY, FROZEN, OR HAVE NOT BEEN APPROVED BY TESTING AND/OR PROOF ROLLING. FREE WATER SHALL BE PREVENTED FROM APPEARING ON THE SURFACE DURING OR SUBSEQUENT TO COMPACTION OPERATIONS.

5. THE CONTRACTOR SHALL ADHERE TO MSHA SECTION 204 (EMBANKMENT AND SUBGRADE), MSHA SECTION 208 (SUBGRADE PREPARATION), AND MSHA SECTION 210 (TAMPED FILL) FOR CONSTRUCTION OF WORK.

6. MAGNETICALLY DETECTABLE WARNING TAPE SHALL ADHERE TO MSHA SECTION 303 (PIPE CULVERTS) AND BE PLACED ABOVE ALL UTILITIES.

7. TRENCH SIDES SHALL BE SLOPED AND/OR BRACED WITH SHORING OR PROTECTED WITH A TRENCH BOX PER OSHA REQUIREMENTS. THIS COST IS INCIDENTAL TO THE PERTINENT EXCAVATION AND BACKFILL ITEMS IN THE CONTRACT.

8. UNSUITABLE MATERIAL SHALL BE REMOVED AND REPLACED WITH SUITABLE MATERIAL AS DIRECTED BY THE ENGINEER.

NO.	REVISION DESCRIPTION	BY	DATE

DESIGNED BY: PJM
DRAWN BY: GLJ
CHECKED BY: PJM
DATE: 09-15-22

WASHINGTON COUNTY, MARYLAND
DIVISION OF ENGINEERING

Washington County Administrative Annex, Building
747 Northern Avenue, Hagerstown, Maryland, 21742
Phone: 240-313-2460 Fax: 240-313-2401

INTERSECTION SIGNAL & SIDEWALK IMPROVEMENTS
STOTLER RD. & HALFWAY BLVD.
GRADING NOTES

STATE OF MARYLAND
PAMELA JEAN NOTH
No. 39251
PROFESSIONAL ENGINEER
9-15-22

SCALE
1" = 10'

SECTION NO.
CS - 09

SHEET NO.
48 OF 48

PROJECT NO.
16-045

K:\CADD\28-281 STOTLER ROAD ADA SIDEWALK\CONSTRUCTION\15 CS - CROSS SECTIONS\28-281 CS.DWG Last Saved: 10/5/2022 2:18 PM